STÄRKE

AMBIANCE SPECIFIERS GUIDE

FOREWORD

Welcome to the latest specifiers design guide for the Ambiance Inline Window System!

At STÄRKE, we are passionate about making it easy; it's just the way we do things. We wish to empower architects and specifiers with knowledge to allow them to explore their creativity, integrating high-performance window systems into their designs.

That is the driving force behind this new guide document. It contains a comprehensive overview of the detail in the STÄRKE Ambiance Inline Window System - everything from technical datasheets to design advice, certificates and reports.

We look forward to working with you to create warmer, drier and healthier homes throughout this beautiful country we live in.

For assistance, clarification, support or further details contact us directly at technical@starke.co.nz or phone us on 09 279 8617.

Yours sincerely,

Team STÄRKE

ABOUT STÄRKE

100%
Kiwi owned
and operated

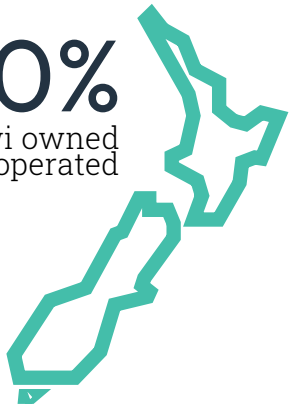

OVER
6000m²
manufacturing facilities
across multiple locations

40
years in
operation

END-TO-END
supply chain

70+
STAFF

2000
units per month capacity

CONTENTS

01
PRODUCTS

Tilt & Turn Window 8
Awning Window 10
Hinged Door 12
Entry Door 14
LiftSlide Door 16
SmartSlide Door 18
VarioSlide 20
Invisifold 22
Custom 23

02
INTERNAL FINISHING OPTIONS

Installation with Reveal 24
Installation with Fixing Tab 25

03
EXTERNAL FINISHING OPTIONS

Recessed Flashing Kit 26-27
Clip-in flange 27

04
HARDWARE ACCESSORIES 29

05
GLAZING

LightBridge Low-E 30
PerformaTech Low-E 31
UV Protection 32
Acoustic 32
Tint / Clarity 32
Datasheets 33

06
COLOURS

Standard Colours 34
Special Colours 34

07
ADDITIONAL RESOURCES

Useful Links 36
STÄRKE Services 37

08
TECHNICAL SUMMARIES

Window R-Value Performance Guide 38-39
Durability 41
Scratch Resistance 42
NZS4211 Summary 43
Acoustic Test Report 44
Burglar Intrusions 45
Awning Size Matrix 46-47
Recycled Content 48
Product Technical Statement 50-53

09
APPENDIX

Engineering Judgement 55
Ambiance uPVC Sustainable
Engineering Report 56-58
Thermal Calculations 59-65
Glass Spacer Report 66-68
Environmental Product Deceleration 69-86
Hardware Corrosion Resistance Report 87-98
Span Charts 99-111
Care & Maintenance 112
Warranty 113
BRANZ Appraisal 114

THE STÄRKE DIFFERENCE

STÄRKE Ambiance uPVC

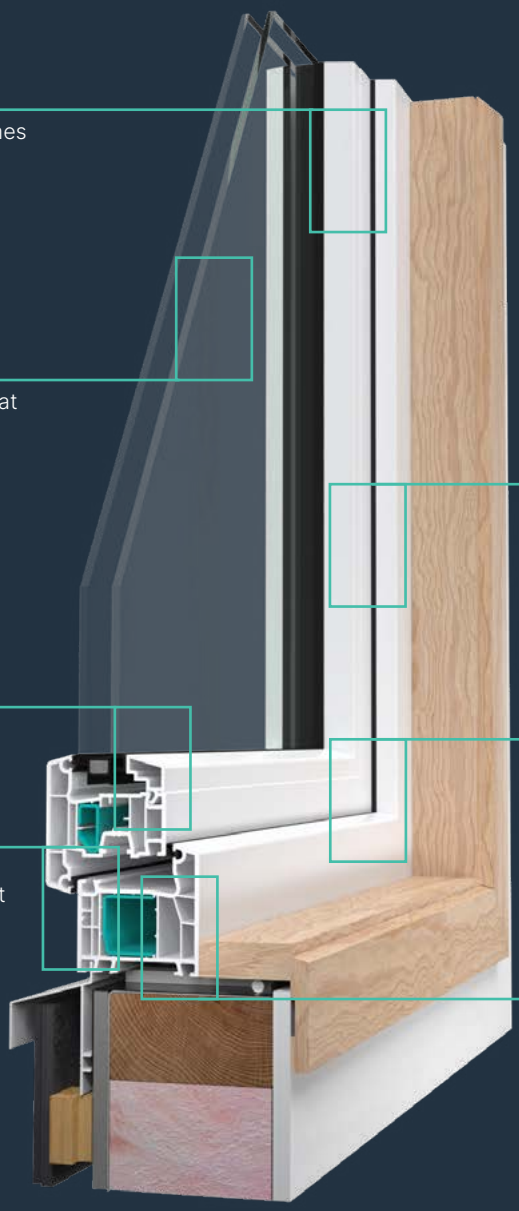

UPVC FRAMES

Strong steel-reinforced uPVC frames to battle against heat transfer and outside noise

LOW-E GLASS

Insulating glass units to control heat loss and solar gain with maximum clarity

INTERNALLY BEADED

Protection from invaders and easy glazing from the inside

DUAL SEALING

Two sealing points which are co-extruded with the frame to prevent any air, water or sound leakage

CO-EXTRUDED GASKETS

Gaskets are co-extruded with the frame profile meaning no path for air, water or sound leakage

WELDED CORNERS

Factory welded corners preventing movement and sealing against air, water and sound leakage

SECURE HARDWARE

Premium multi-point locking hardware makes it burglar resistant

AMBIANCE INLINE WINDOW SYSTEMS

TILT & TURN WINDOW

ADVANTAGES

- Easily clean the outside pane from inside with the turn functionality
- Increased security with multiple locking points
- Better thermal performance and air-tightness than an awning or casement
- Larger windows available than awning
- Secure ventilation while you are out
- Highest rated sound insulation
- Lower maintenance and longer life expectancy than an awning, because the weight is not hanging on the fastenings

DESIGN ADVICE

- Best option for high performance builds because of the high air-tightness
- Ideal for second-storey windows, so the outside can be cleaned. Keep sill height above 1000mm so there is no fall risk.
- Tilt-only is ideal for large picture windows where ventilation is required
- Tilt-only is the most cost effective option
- Tilt-before-turn can be can be specified with a key to meet safety from falling NZBC F4
- Lowest maintenance option
- Open-in configuration requires wall-mounted curtains
- No raked opening sashes - the operable window must be square

TECHNICAL

70mm
Construction depth

1.3 W/m²K
Best U_f value

R 1.3 M2k/w
Best R-value (TGU only)

Up to 44dB
Sound insulation

1600w x 2400h
Max Dimensions

R 0.74 M2K/w
Average R-value

Passive House Recommended

600w x 600h
Min Dimensions

Up to RC2
Burglar Resistance

Up to 41mm Glazing
Double or Triple glazing

Category 4
Airtightness

FEATURES

Dual opening function

Multi-point locking

Secure venting

Double or triple glazing

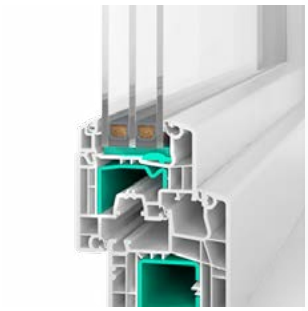

1033 Lever Handle

- Clean modern aesthetic
- Available in black or white
- Dual function with Tilt and Turn
- Added security with multiple locking points.

Cross Section

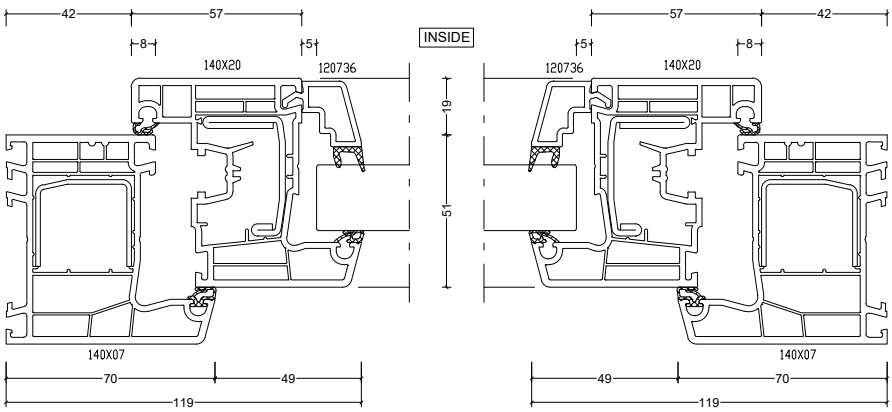

AMBIANCE INLINE WINDOW SYSTEMS

AWNING WINDOW

ADVANTAGES

- Traditional opening style in New Zealand
- Inferior performance to Tilt & Turn
- Enables secure ventilation with multi-point interior locking
- Can be locked in ventilating position
- More secure than an aluminium window
- Best used on smaller units
- Can pose a risk when opening onto passageways or decks

DESIGN ADVICE

- Best used for refurbishments or smaller windows
- Commonly used in more traditional builds
- Best used on builds where low cost is a primary factor
- No raked opening sashes - the operable window must be square

TECHNICAL

70mm
Construction depth

1.3 W/m²K
Best U_f value

R 1.3 M2k/w
Best R-value (TGU only)

Up to 44dB
Sound insulation

1400w x 1600h
Max Dimensions
* Refer to awning size matrix

R 0.74 M2K/w
Average R-value

Not Passive House Recommended

600w x 600h
Min Dimensions

Up to RC1
Burglar Resistance

Up to 41mm Glazing
Double or Triple glazing

FEATURES

Multi-point locking

Secure venting

Welded corners

Vita Lever Handle

- Cranked design for easy use
- Available in black or white
- Secure locked ventilation
- Added security with multiple locking points.

Cross Section

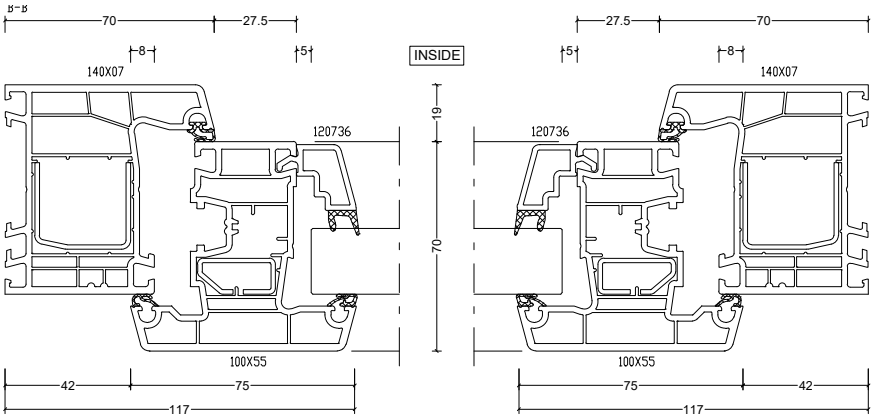

AMBIANCE INLINE WINDOW SYSTEMS

HINGED DOOR

ADVANTAGES

- Traditional opening style, can be used in a “French door” style
- Open in and open out configurations
- High air-tightness with multi-point locking
- Very high security
- Wide opening - provides 100% opening space
- Low maintenance with reliable hinges and locking mechanisms
- Recommend for Passive House designs

DESIGN ADVICE

- Recommended for service doors or laundry doors
- Low-height sill option
- High air-tightness makes for the best option for Passive House.
- Can be paired with side-lights for secure ventilation
- Multi-point locking available
- Open in is recommended as a Tilt & Turn
- Parliament hinge option for brick veneer cladding

TECHNICAL

70mm
Construction depth

1.3 W/m²K
Best U_f value

R 1.3 M2k/w
Best R-value (TGU only)

Up to 44dB
Sound insulation

1200w x 2600h
Max Dimensions

R 0.74 M2K/w
Average R-value

Passive House Recommended

Up to RC2
Burglar Resistance

Up to 41mm Glazing
Double or Triple glazing

FEATURES

Low threshold option

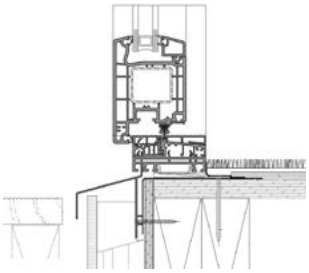

Digital lock - ELOK

French door configuration

Multi-point locking

1033 Lever Handle

- Clean modern aesthetic
- Available in black or white
- Added security with multiple locking points
- Multiple key and snib configurations

Cross Section

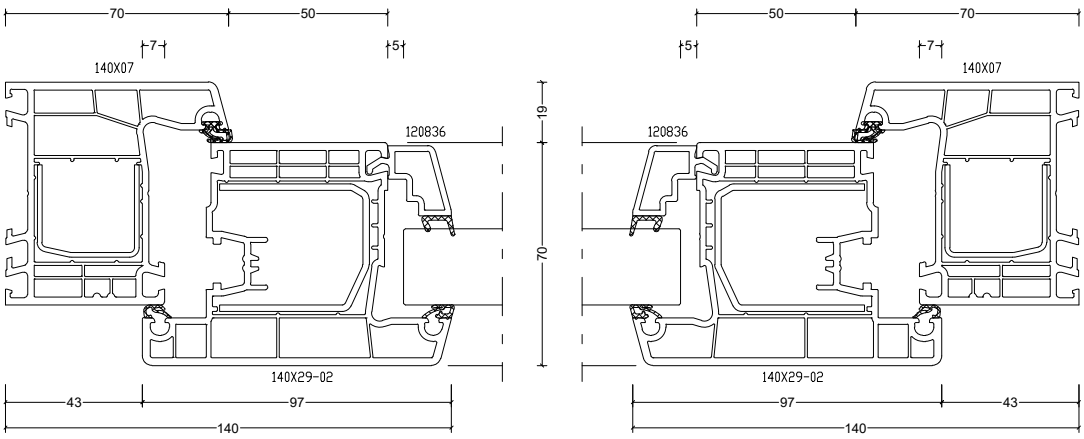

AMBIANCE INLINE WINDOW SYSTEMS

ENTRY DOOR

ADVANTAGES

- Glazing, frosted, full panel, or panel with transom/ mullion options
- 40mm composite panel can be glazed into the sash
- 50mm composite/aluminium/timber panel can be mounted directly to frame
- Large range of design options and colours to suit every taste available.

DESIGN ADVICE

- Sheltered installation preferred - away from full sun exposure and driving rain
- A large range of configurations available
- Equivalent R-values of standard doors achieved
- Peep holes can be incorporated
- Side-lights are a common design feature
- 40mm glazed-in sash panels have full multi-locking and air-tightness, but have limited electronic lock options
- 50mm hinged-in panels have single-point locking, worse air-tightness, all lock options but come at an extra cost.
- Parliament hinge option for brick veneer cladding

TECHNICAL

70mm
Construction depth

1.3 W/m²K
Best U_f value

R 1.3 M2k/w
Best R-value (TGU only)

Up to 44dB
Sound insulation

1100w x 2600h
Max Dimensions

R 0.74 M2K/w
Average R-value

Passive House Recommended
(glazed-in panels only)

Up to RC2
Burglar Resistance

Up to 41mm Glazing
Double or Triple glazing

FEATURES

Digital lock - ELOK

Configurable

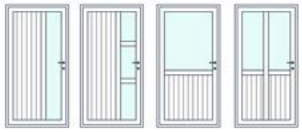

Low sill option

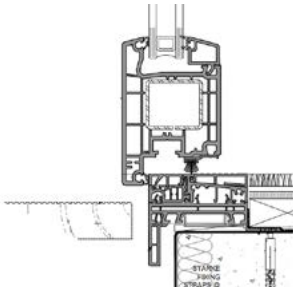

Offset French panel option

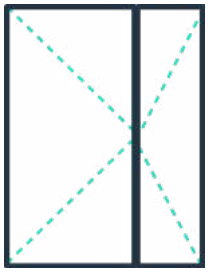

1033 Lever Handle

- Clean modern aesthetic
- Available in black or white
- Added security with multiple locking points
- Multiple key and snib configurations

Cross Section

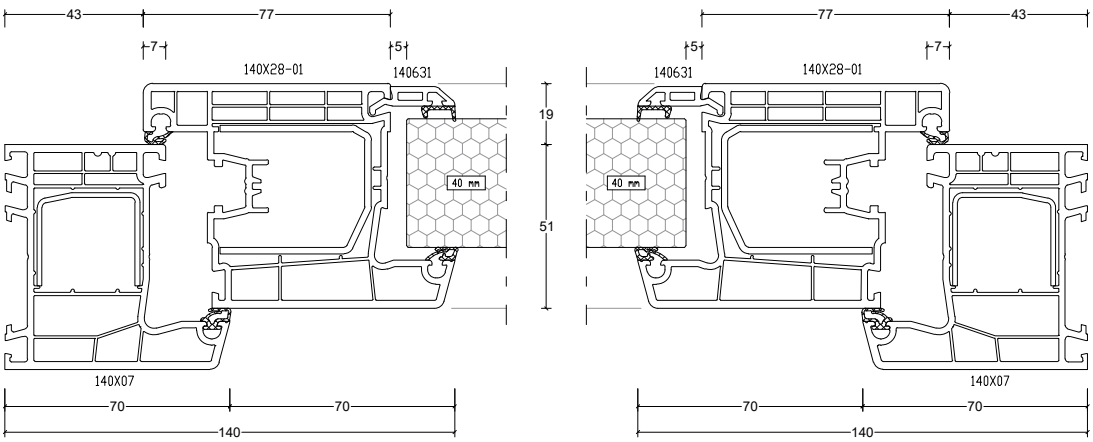

AMBIANCE INLINE WINDOW SYSTEMS

LIFTSLIDE DOOR

ADVANTAGES

- Fully flush sill, barrier free entry possible
- Air-tightness level suitable for Passive House
- Opened and closed without effort even with extra large door panel sizes
- Suitable for double or triple glazing

DESIGN ADVICE

- Most luxurious door in the STÄRKE Ambiance Range
- Recommended for projects with high air-tightness requirements such as Passive House
- Sliding and bi-parting configurations only
- Rebate the sill for perfectly flush entry

TECHNICAL

200mm
Construction depth

1.1 W/m²K
Best U_f value

R 1.3 M2k/w
Best R-value (TGU only)

Up to 44dB
Sound insulation

10,000w x 2820
Max Overall Dimensions

0.63 W/m²K
Best U_W value

Passive House Recommended

2500w x 2820h
Max Panel Dimensions

Up to RC2
Burglar Resistance

Up to 50mm Glazing
Double or Triple glazing

1700w x 1975h
Min Overall Dimensions

FEATURES

Flush sill

Large panels

Air-tight frame

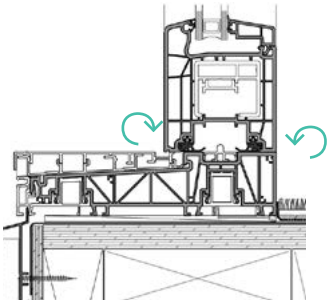

Smooth sliding

Siegenia

- Available in black or white
- Lever handle operates the sealing function
- Added security with multiple locking points
- Multiple key and snib configurations
- Flush pull option on the outside

Cross Section

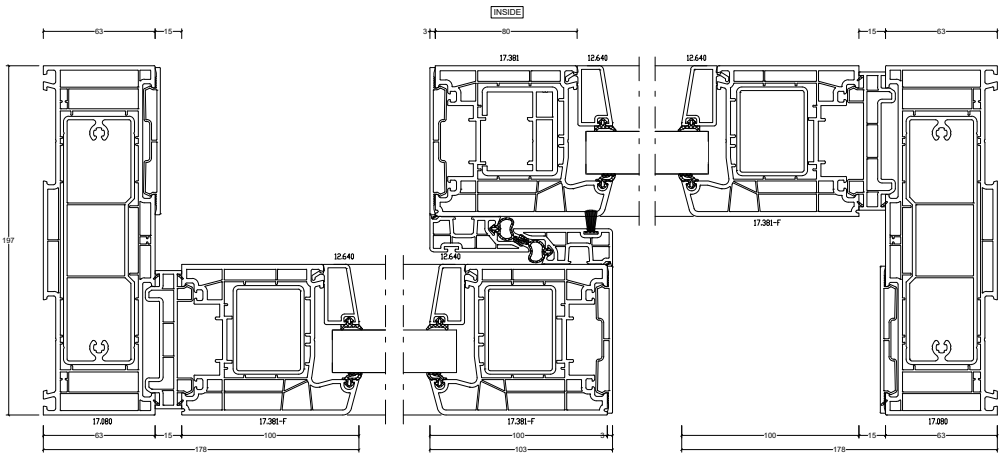

AMBIANCE INLINE WINDOW SYSTEMS

SMARTSLIDE DOOR

ADVANTAGES

- SmartSlide technology allows high air-tightness
- Large panel openings available
- Best-selling sliding door system
- Smart sliding hardware enables silent free-gliding movement
- Sliding or Bi-parting configurations available
- Hardware allows secure locked venting function for passive airflow

DESIGN ADVICE

- Most cost-effective high air-tightness door, suitable for Passive House.
- Recommend no more than two doors for Passive House
- Large panel sizes available
- Suitable for SED wind zones
- Sliding panel to be at least 100mm wider than the height

TECHNICAL

140mm
Construction depth

1.3 W/m²K
Best U_f value

R 1.3 M2k/w
Best R-value (TGU only)

Up to 44dB
Sound insulation

5800w x 2640h
Max Overall Dimensions

R 0.74 M2K/w
Average R-value

Passive House Recommended

2000w x 2640h
Max Panel Dimensions

Up to RC2
Burglar Resistance

Up to 41mm Glazing
Double or Triple glazing

1500w x 700h
Min Overall Dimensions

FEATURES

Secure venting

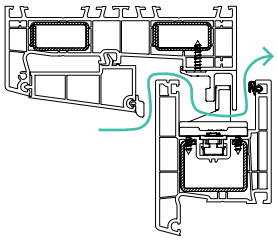

Smooth sliding

Air-tight frame

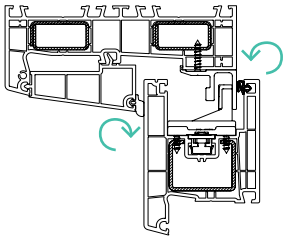

Multi-point locking

Maco Move

- Available in black or white
- Lever handle operates the sealing function
- Added security with multiple locking points
- Multiple key and snib configurations
- Flush pull option on the outside

Cross Section

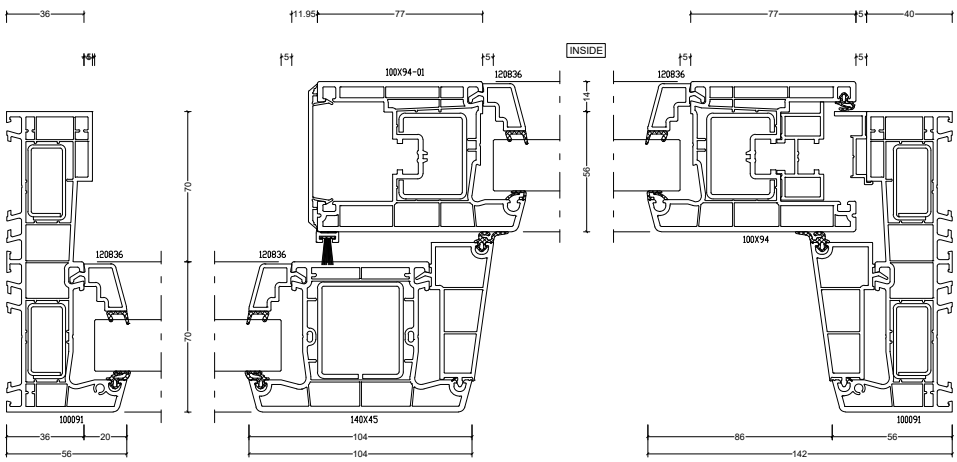

AMBIANCE INLINE WINDOW SYSTEMS

VARIOSLIDE

ADVANTAGES

- Stackers and Sliders available
- Great for large openings and indoor-outdoor flow
- Cost-effective entry-level door with high thermal performance
- Most similar to a traditional aluminium sliding door

DESIGN ADVICE

- Stacking or sliding doors available, including 4- or 6-panel bi-parting doors
- No awnings available in fixed pane
- Can be rebated for flush entry
- Recommended 140mm framing for all stackers
- Recommended 90mm framing for all sliders

TECHNICAL

70mm/125mm
Construction depth (Slider/Stacker)

5800w x 2400h
Max Overall Dimensions

Up to RC1
Burglar Resistance

1.3 W/m²K
Best U_f value

R 0.74 M2K/w
Average R-value

24mm Glazing
Double glazing

Very High
Max Wind Zone

Not Passive House Recommended

1200w x 700h
Min Overall Dimensions

Up to 35dB
Sound insulation

1500w x 2400h
Max Panel Dimensions

FEATURES

Multi-point locking

Awning sidelight

Rebated sill

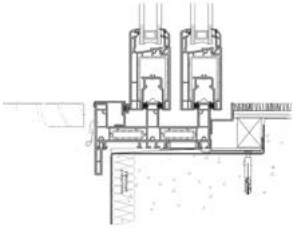

Stacker

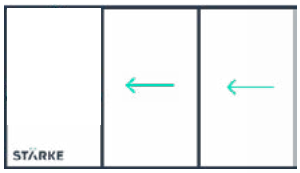

1033 Lever Handle

- Available in black or white
- Added security with multiple locking points
- Multiple key and snib configurations
- Flush pull option on the outside

Cross Section

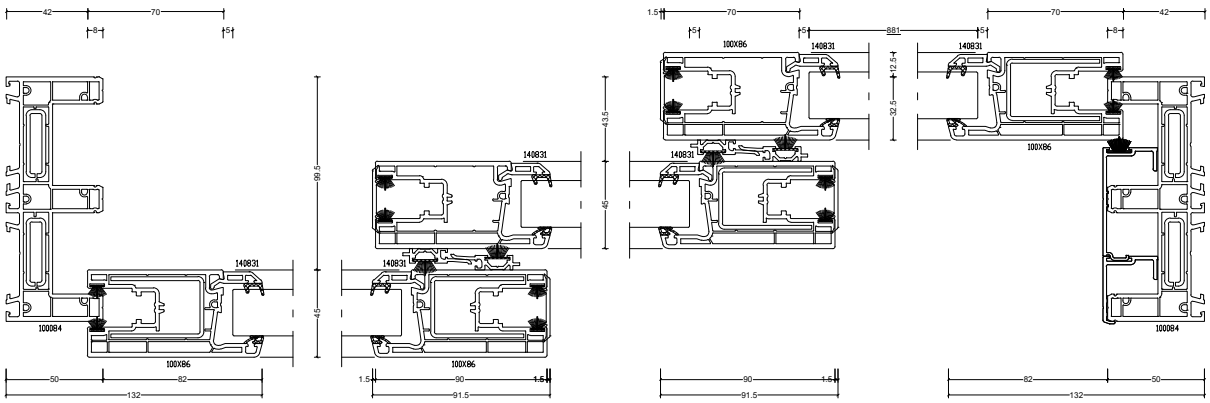

AMBIANCE INLINE WINDOW SYSTEMS

INVISIFOLD

ADVANTAGES

- Each panel operates individually reducing the load on the other panels
- All panels stack in one direction
- First panel is hinged opening and can be used as a single door
- Can open a few panels only - don't have to open all at once
- Easy operation

DESIGN ADVICE

- Open out operation
- Average panel size of 800mm - 900mm
- The wind zone will affect the panel width
- Cross sections are similar to Open Out Hinged Door
- Consider Smartslide or LiftSlide if higher air-tightness is required

TECHNICAL

70mm
Construction depth

1.3 W/m²K
Best U_f value

Very High
Max Wind Zone

Up to 35dB
Sound insulation

3200w x 2400h
Max Overall Dimensions

R 0.63 M2K/w
Average R-value

Not Passive House Recommended

900w x 2400h
Max Panel Dimensions

Up to RC1
Burglar Resistance

Up to 24mm Glazing
Double glazing

4 Panels
Max Panel Quantity

AMBIANCE INLINE WINDOW SYSTEMS

CUSTOM UNITS

ADVANTAGES

- Custom shapes and sizes available
- Coupled units available with all systems
- Allows greater flexibility to design special items to compliment your design

DESIGN ADVICE

- Raking units a minimum angle of 30 degrees
- Maximum of 5 corners per window for raking units
- Take into account the profile width when coupling units
- Wind beams or lintels provide a good solution to overcome deflection for larger units

TECHNICAL

85mm
Construction depth

Enquire
Max panel width

Up to RC2
Safety

1.1 W/m²K
Best U_f value

0.63 W/m²K
Best U_W value

Up to 44dB
Sound insulation

INTERNAL FINISHING OPTIONS

INSTALLATION WITH REVEAL

Installation with a timber liner is the traditional window installation method in New Zealand. This method includes a pre-primed 18mm timber reveal, fitted to the window in the factory.

TWO SECURE FIXING POINTS

Historically, this timber liner is only stapled to the aluminium frame, however with our Ambiance uPVC system, the liner is fixed through the frame with a nail at regular intervals, in addition to staples. Also, steel fixing tabs - which clip into the frame - are fitted and fixed with screws into the back of the timber liner. This provides a very secure fixing of the liner to the frame, as it should be.

AIR-TIGHT TAPE

Additionally, we apply a premium air-tight tape around the entire perimeter of the frame, overlapping the window frame and timber liner. This means there is no air leakage at all between the liner and frame - a high-performance solution directly from the factory.

After the window is fixed into the building wall framing, PEF rod is inserted in the cavity then sealed in place with a unbroken bead of wet seal product. This completes the internal installation of the Ambiance window and provides a high-performance, air-tight solution superior to other mainstream products available in New Zealand currently.

This allows for:

- Grooved liners for plasterboard return
- Flat liners for finishing with an architrave

Grooved Liners

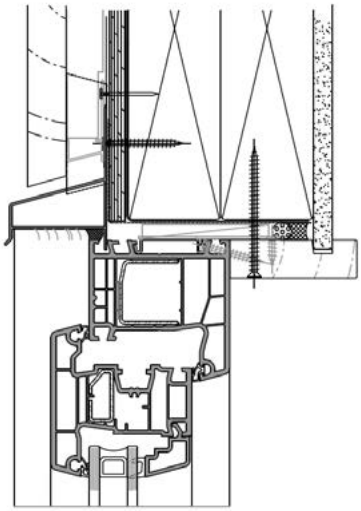

Architrave

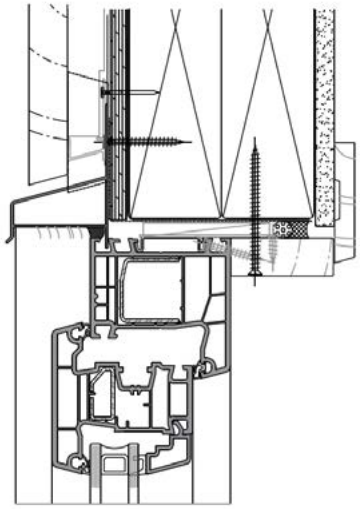

INSTALLATION WITH FIXING TAB

Installation with fixing tabs is a more flexible option for the internal finishing options available. No timber reveals are supplied, instead steel fixing tabs are clipped into the frame in the factory ready for installation. The fixing tabs can be trimmed onsite to the correct length, depending of the wall framing depth.

FLEXIBLE INTERNAL FINISHING OPTIONS

No timber reveals are supplied from the factory with this method. This allows you to design and specify the best option to suit your clients requirements. This includes allowance for a plasterboard return option or tiles directly up to the window frame. Reveals can also be used with this fixing method. When installed, the internal finishing should cover the tape overlapping the frame at least and do so without puncturing the tape. It is also possible to bring the internal finishing in to cover the whole frame depth, making for a minimalist frame appearance.

AIR TIGHT TAPE

Air-tightness tape is supplied in rolls with each window delivery. This is to be installed to cover the window frame by 10mm and the rest overlapping onto the building framing. It is to be fitted after the window is installed and ensures a completely air-tight dry installation. It is important this tape is fitted after the window is fixed in place and completely covers the entire steel fixing tab.

This allows for more flexibility with the internal finishing, including:

- Plasterboard/tile return
- Grooved liners for plasterboard return
- Flat liners for finishing with an architrave

PLANTED LINERS

This allows for the same finishing options as installation with reveal method

Grooved Liners

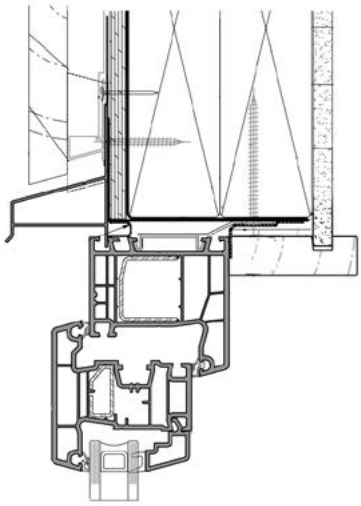

Architrave

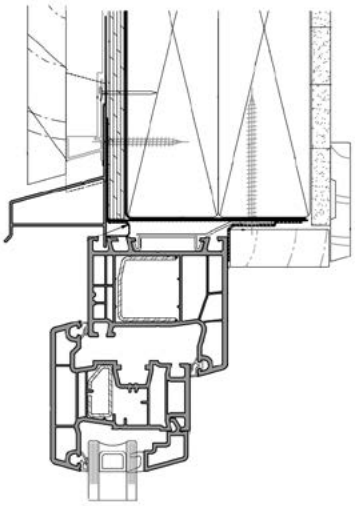

EXTERNAL FINISHING OPTIONS

RECESSED FLASHING KIT

Recessing your windows into the building framing has long been proven to get the most out of the thermal performance of the frames - this is just basic building science. The key point is connecting the wall insulation with the window insulation: a recessed window install.

Ambiance uPVC windows and doors have a high thermal performance value for joinery that is available in the mainstream building supplies market in New Zealand and with volume supply capability.

Included with the Ambiance uPVC Inline Window System is a 4-sided flashing system, covering the perimeter of the window externally on the head, sill and jambs. This cleanly covers the external cavity and cladding, in a simple way making installation easy.

This kit is designed to cover the cavity and cladding to protect the cavity from rain, and to provide an aesthetic, functional and easy recessed installation.

- Available in different sizes for different cavity and cladding applications
- 4-sided (head, jamb & sill) flashing kit
- Proprietary design - extruded aluminium and powder coated to match the uPVC joinery colour
- Built-in leg which slots into groove in the uPVC profile

CLASSIC INSTALL

DEVIATION FROM ORIGINAL DESIGN INTENT

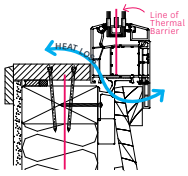

Psi Install	0.088W/(MK)
fRSI	0.608

RECESSED INSTALL

FIT-FOR-PURPOSE INSTALLATION

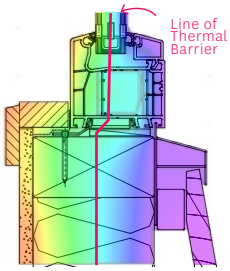

- Installed as designed
- World-class thermal performance
- Continuous thermal barrier
- No thermal bridge
- Stärke flashing system
- Negligible cost impact
- Tested weather-tightness
- Alternate compliance pathway

Psi Install	0.058 W/(MK)
fRSI	0.640

FLASHING KIT SIZES

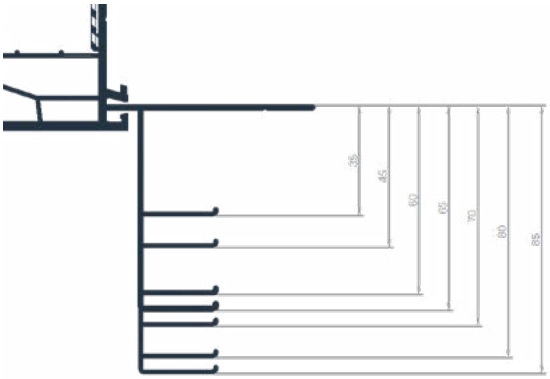

FLASHING KIT SIZES	RECOMMENDED CLADDING DIMs	SOME TYPICAL APPLICATIONS
35mm	25 to 29mm	19 Cavity & 9mm Sheet -OR- 19 Cavity & Folded Metal Cladding
45mm	35 to 39mm	19 Cavity & 19mm Sheet -OR- 19 Cavity & Rusticated Weatherboard
60mm	50 to 54mm	19 Cavity & Bevel-Back Weatherboard -OR- 45 Cavity & 9mm Sheet
65mm	55 to 59mm	50 Cavity & 70 Brick -OR- 45 Cavity & Folded Metal Cladding
70mm	60 to 69mm	45 Cavity & 19mm Sheet -OR- 45 Cavity & Rusticated Weatherboard
80mm	70 to 74mm	19 Cavity & Bevel-Back Weatherboard with Facings
85mm	75 to 79mm	45 Cavity & Bevel-Back Weatherboard

CLIP IN FLANGE

A 30mm or 50mm clip in uPVC flange is also available. Typical uses for this are:

- On the sill only for doors and windows where the window frame is on the floor
- Renovations and retro-fit projects
- Standard E2/AS1 install (not recommended by STÄRKE as this compromises the thermal performance of the frame)

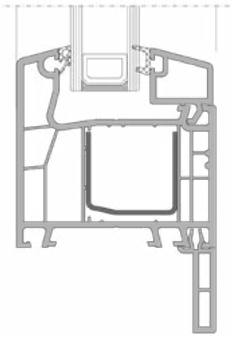

HARDWARE ACCESSORIES

RESTRICTOR STAYS

- Restricts the window opening to 100mm
- Stainless Steel
- Fully concealed design

HOLD BACKS

- Wall and floor mounted options
- Coloured to match joinery or any powder coat colour
- Short or long throw options
- Easy to install

DOOR VIEWER

- Wide viewing angle
- One-way viewing for security

WINDOW ACTUATORS

- Available in black and white
- Controllable by a physical switch or automation system
- Compatible with awning and Tilt-only windows

CONCEALED WINDOW ACTUATORS

- Includes multi-point locking control
- Fully concealed installation
- Controllable by a physical switch or automation system
- Compatible with Tilt & Turn and Tilt-only windows

COLONIAL / GEORGIAN BARS

- Colour matched uPVC profile
- Includes rubber gaskets
- Strong application for long life
- Applied on the external faces of the glass

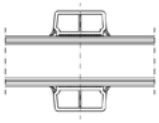

LOW-E GLAZING

LIGHTBRIDGE 1.1™

LightBridge 1.1™ is a low-e coating supplied by Viridian Glass for double and triple glazed units.

This glass is designed to allow heat from the sun to enter your home for warmth and retain it inside.

APPLICATIONS

- Residential homes
- Walk-ups and townhouses
- Residential apartments

SPACER

All LightBridge 1.1 glass units contain a thermally improved spacer bar and argon gas.

DESIGN CONSIDERATIONS

- Maximum size: 4500mm x 2700mm (varies with glass type and thickness)
- Internal gem bars are not compatible with low-e glass, consider external colonial bars if required
- In warmer areas, consider specifying LightBridge to the south and east elevations to maximise the heat from the sun.
- Available in clear, grey tint and EtchLite obscure options

PERFORMATECH™

PerformaTech is a low-e coating supplied by Viridian Glass for double and triple glazed units.

This glass is designed to restrict heat from the sun entering your home to assist with overheating, and retain heat generated inside.

APPLICATIONS

- Residential homes
- Walk-ups and townhouses
- Residential apartments
- Commercial

SPACER

All PerformaTech glass units contain a thermally improved spacer bar and argon gas.

DESIGN CONSIDERATIONS

- Maximum size: from 3300mm x 2140mm to 4500mm x 2700mm (varies with glass type and thickness)
- Internal gem bars are not compatible with low-e glass, consider external colonial bars if required
- In warmer areas, consider specifying PerformaTech to the north and west elevations to assist with preventing overheating
- This glass allows 35% of the suns heat through, so extra heating may be required in winter if PerformaTech is used
- External solar shading is the most effective way to combat overheating in summer
- Available in clear, grey tint and EtchLite obscure options

UV PROTECTION

Tdw-ISO is the measure of damaging light wavelengths that can pass through the glass. While all wavelengths on the spectrum contribute to fading, some do more damage than others, such as UV light. Twd-ISO is a weighted measure to account for this and provide an accurate result.

Tdw-ISO is measured relative to a standard clear/clear DGU which has a Twd-ISO of 0.73. So, a laminated DGU with a Twd-ISO of 0.57 is about 57% better at protecting interior furnishings than a clear/clear DGU.

Laminated glass is the best option to consider to protect interior furnishings from fading.

ACOUSTIC

STC Rating (Sound Transmission Class) is the measure of the glass ability to reduce sound penetrating through it. The higher the rating, the better the glass is at preventing sound passing through it. The STC Rating ranges from 25 (no soundproofing) to 65 (completely soundproof).

A single glazed window has an STC of around 25, a standard double glazed window will often be around 33-35.

Laminated glass is the best option to increase the STC of windows and doors.

TINT / CLARITY

Visible Light Transmission (VLT) is a measure, as a percentage, of how much light passes through the glass.

With no glass, there will be a VLT of 100%, therefore an IGU with a VLT of 80% will let through 80% of the outside light.

Grey tint is a popular option to include for aesthetics, however it significantly reduces the amount of light able to enter a room. Tinted glass, contrary to some thoughts, doesn't do much to reduce fading - for this, consider Low-E or laminated options.

Tinting the glass also reduces the solar heat gain (g value), however, this can be an artificial benefit as the glass itself heats up and then radiates this heat into the room.

GLASS DATASHEETS

LOW-E ON CLEAR

		Thickness	Ug	g	STC [dB]	Twd-ISO	VLT [%]	Rw
LightBridge	Double	4	1.119	0.59	30	0.65	79	0.74
		5	1.144	0.58	31	0.65	78	0.74
		6	1.269	0.57	31	0.63	77	0.74
	Triple	4	0.637	0.49	31	0.53	69	0.91
		5	0.674	0.49	34	0.53	68	0.91
		6	0.715	0.48	32	0.52	68	0.91
PerformaTech	Double	4	1.042	0.38	30	0.57	72	0.74
		5	1.068	0.38	34	0.53	71	0.74
		6	1.198	0.38	31	0.53	71	0.74
	Triple	4	0.590	0.31	30	0.43	59	0.91
		5	0.628	0.31	31	0.40	59	0.91
		6	0.671	0.30	31	0.40	58	0.91

LOW-E ON LAMINATE

		Thickness	Ug	g	STC [dB]	Twd-ISO[%]	VLT [%]	Rw
LightBridge	Double	4	1.14	0.56	35	0.54	78	0.74
		5	1.28	0.56	34	0.54	78	0.74
		6	1.26	0.55	38	0.54	77	0.74
	Triple	4	0.67	0.47	36	0.54	69	0.91
		5	0.67	0.47	36	0.45	68	0.91
		6	0.72	0.46	39	0.46	68	0.91
PerformaTech	Double	4	1.07	0.37	38	0.50	73	0.74
		5	1.19	0.38	38	0.47	72	0.74
		6	1.19	0.38	38	0.47	71	0.74
	Triple	4	0.63	0.31	38	0.39	59	0.91
		5	0.63	0.31	38	0.37	58	0.91
		6	0.67	0.31	39	0.37	58	0.91

LOW-E ON GREY TINT

		Thickness	Ug	g	STC [dB]	Twd-ISO[%]	VLT [%]	Rw
LightBridge	Double	4	1.119	0.41	32	0.40	50	0.74
		5	1.143	0.37	33	0.34	44	0.74
		6	1.269	0.34	33	0.29	39	0.74
	Triple	4	0.637	0.34	30	0.21	44	0.91
		5	0.674	0.30	34	0.28	37	0.91
		6	0.715	0.26	36	0.24	32	0.91
PerformaTech	Double	4	1.042	0.33	32	0.35	46	0.74
		5	1.068	0.30	33	0.28	41	0.74
		6	1.198	0.28	33	0.25	32	0.74
	Triple	4	0.590	0.31	30	0.27	38	0.91
		5	0.628	0.30	31	0.19	33	0.91
		6	0.670	0.30	31	0.19	29	0.91

NOTES:

- LightBridge is applied to surface 3 on DGUs and 3 & 5 on TGUs
- PerformaTech is applied to surface 2 on DGUs and 2 & 4 on TGUs
- All glass panes in the IGU are the same thickness, except:
  - Laminate pane is 6.38mm
  - Centre pane in TGU is 4mm
- DGU total filling thickness is 24mm
- TGU total filling thickness is 40-41mm
- Spacer thickness is the total filling thickness minus the sum of all pane thicknesses
- Rw value is an average for a sample house lot with Ambiance uPVC frames and Low-E
- Spacer includes a thermally improved spacer bar and argon gas

KEY:

Ug Heat loss

g Heat gain

STC Acoustic

Twd-ISO Fading

VLT Visual clarity

Rw Average of the entire window with Ambiance uPVC frames

COLOURS

STÄRKE Ambiance is available a variety of colours, and we keep stock in both black and white for shorter lead times and improved costs. Special colours can be ordered in on request and are available at a premium with extended lead times.

STANDARD COLOURS

BLACK

- RAL 9011
- Aludec lamination technology for UV and heat protection
- Powdercoat match: Flaxpod
- Profile coloured throughout

WHITE

- RAL 9016
- Powdercoat match: Appliance White
- UV protection
- Profile coloured throughout

SPECIAL COLOURS

Anthracite Grey

Window Grey

Umbra Grey

Basalt Grey

Turner Oak Toffee

Turner Oak Malt

Turner Oak Walnut

Sheffield Oak Concrete

USEFUL LINKS

MasterSpec Specification 4541 SU

masterspec.co.nz/Link-to-Masterspec-Result/6702-731db613-6a4b-49c0-9dbd-da5e0baeb272/

masterspec Partner Net

MasterSpec

All BIM Information

starke.co.nz/ambiance/specifiers-portal/

- PDF
- DWG
- REVIT
- ARCHICAD
- Cross sections, installation drawings

Ambiance Specifiers Portal

Working Spec 3D Installation Model

workingspec.me/models/sg-wfl-w70

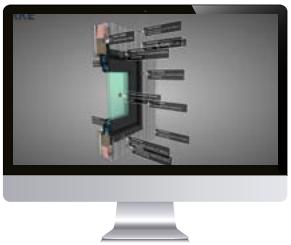

Working Spec Model Library

STARKE ACADEMY – Blogs & Learning

starke.co.nz/ambiance/blog/

STÄRKE Blog

STÄRKE H1 Optimiser

starke.co.nz/ambiance/h1-calculator

STÄRKE H1 Optimiser

STÄRKE Knowledge Base

https://starke.knowledgeowl.com/help

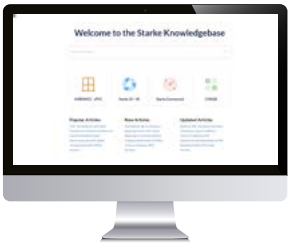

STÄRKE Knowledge Base

STÄRKE SERVICES

STÄRKE is one of the only end-to-end joinery suppliers in New Zealand, which makes us uniquely placed to streamline your workflow, and provide high volume, high performance joinery on time and to specification.

We work with architects, engineers and specifiers from initial consultation, right through to pricing building partners, confirming specifications, and then fabrication, delivery and installation.

ARCHITECTURAL SUPPORT & DETAILING

- Design consultation
- Shop Drawings & PS1
- Samples boxes nationwide

TESTING & COMPLIANCE

- H1 compliance documentation via schedule, calculation or modelling method
- Support with council documentation & RFI
- Onsite or offsite joinery testing
- Blower door testing (coming soon)

EDUCATION & TRAINING

- Preliminary, budget and final pricing
- Architects Education, CPD accredited presentations
- Installation & after sales

FABRICATION & DISTRIBUTION

- Joinery fabrication

TECHNICAL SUMMARIES

The following R Value Performance Guide (as per NZBC H1/AS1 Table E.1.1.1) shows just how great the performance gap is between thermally broken aluminium and uPVC window frames – irrespective of the glazing specification.

WINDOW R-VALUE PERFORMANCE GUIDE

As per NZBC H1/AS1 Table 1.1.1

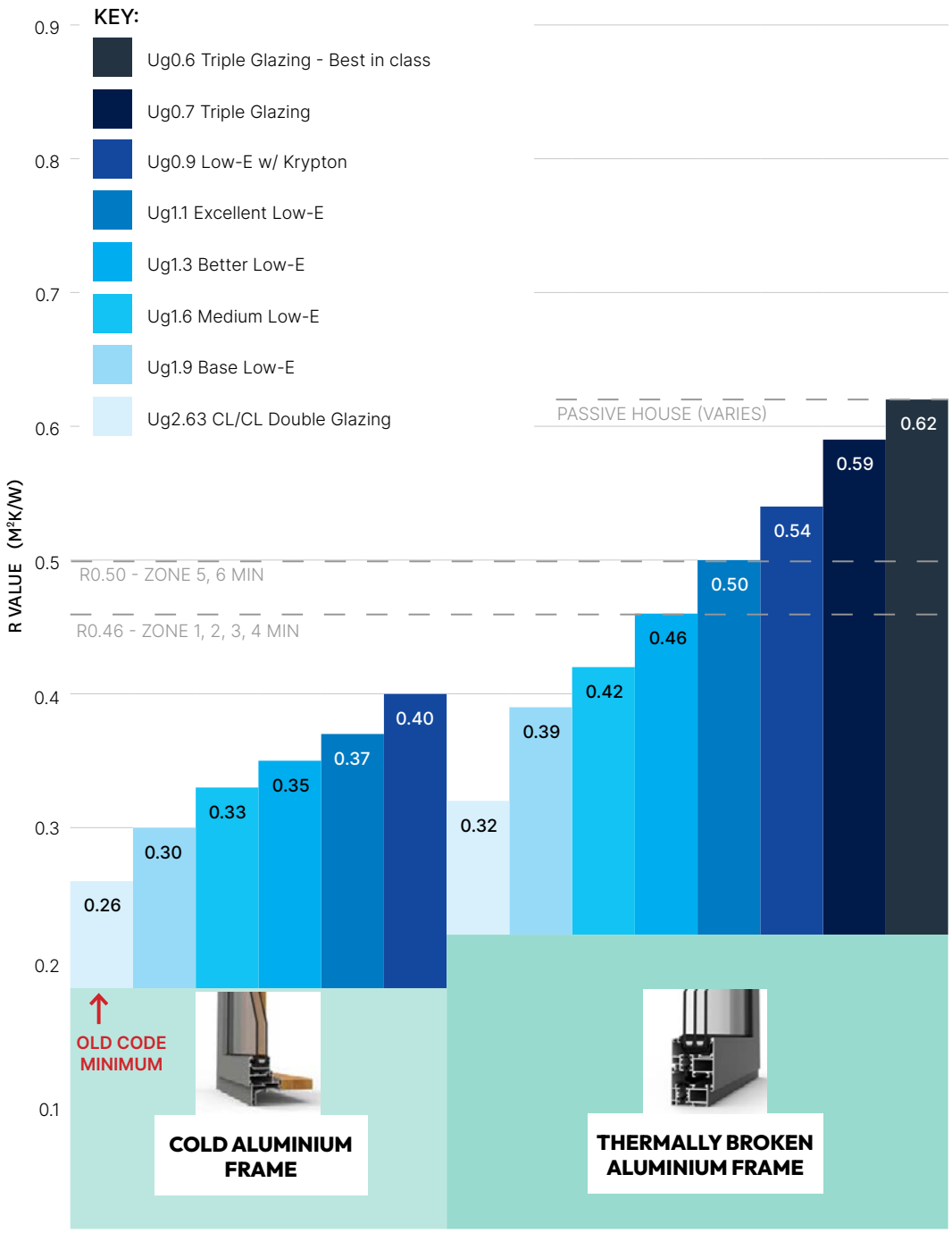

COPYRIGHT STARKE GROUP NOV 2023

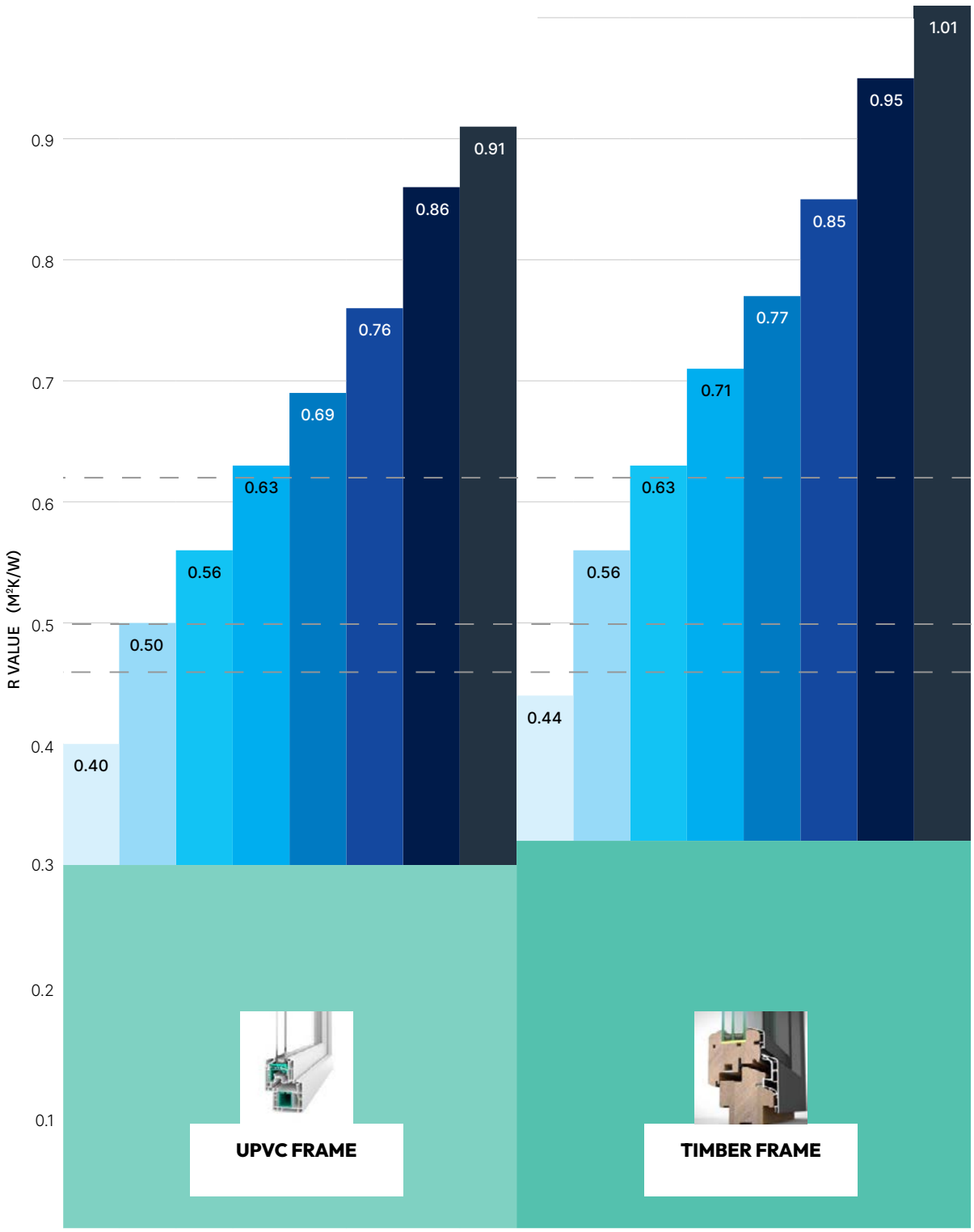
R VALUE (M²K/W)
0.9
0.8
0.7
0.6
0.5
0.4
0.3
0.2
0.1
0.40
0.50
0.56
0.63
0.69
0.76
0.86
0.91
0.44
0.56
0.63
0.71
0.77
0.85
0.95
1.01
UPVC FRAME
TIMBER FRAME

DURABILITY

New Zealand's diverse climate, ranging from the sunny North to the icy deep South, presents a huge durability challenge for most construction materials. When it comes to window frames, surviving in the face of varying temperatures, high humidity, and exposure to intense sunlight is paramount. In this context, uPVC (unplasticised polyvinyl chloride) emerges as a stand out material, offering exceptional performance for New Zealand homes.

WARRANTY

STÄRKE include a 10-year warranty period which serves as a commercial commitment to the durability of our uPVC window frames. Manufacturers typically offer this warranty to assure customers of the product's quality and performance, providing coverage for any unforeseen issues during the initial period of use. It should be noted that different manufacturers have varying levels of faith in their own product, and sometimes this is represented in shorter warranty times.

EXPECTED LIFESPAN

The expected life-span of 40-50 years is the anticipated duration that uPVC windows are designed to endure without significant deterioration. This considers factors such as material strength, resistance to weathering, and overall structural integrity over a prolonged period. It should be noted that this is a subjective topic and the expected lifespan is a design consideration, but not accounted for in the building code.

UV RESISTANCE CERTIFICATE

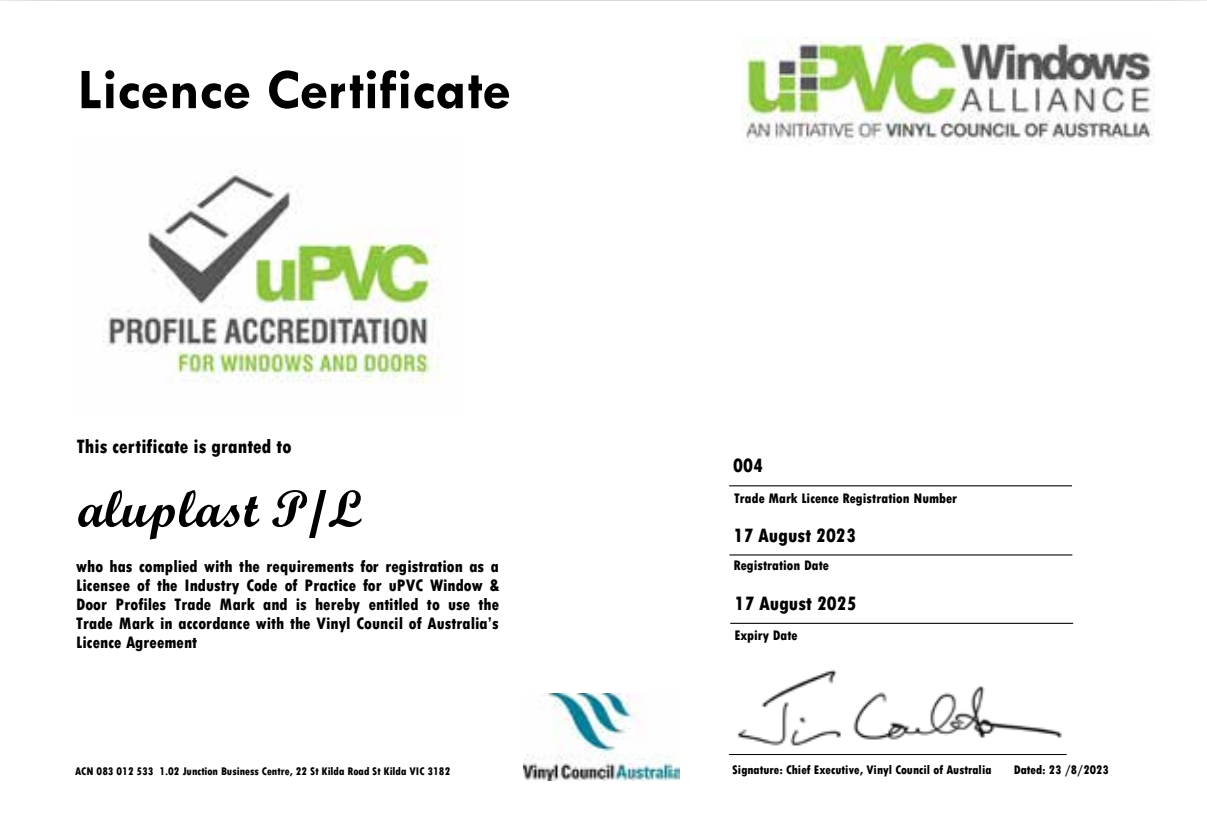

Licence Certificate

uPVC Windows ALLIANCE
AN INITIATIVE OF VINYL COUNCIL OF AUSTRALIA

uPVC PROFILE ACCREDITATION FOR WINDOWS AND DOORS

This certificate is granted to

aluplast P/L

who has complied with the requirements for registration as a Licensee of the Industry Code of Practice for uPVC Window & Door Profiles Trade Mark and is hereby entitled to use the Trade Mark in accordance with the Vinyl Council of Australia's Licence Agreement

004
Trade Mark Licence Registration Number

17 August 2023
Registration Date

17 August 2025
Expiry Date

Vinyl Council Australia

Signature: Chief Executive, Vinyl Council of Australia Dated: 23 /8/2023

ACN 083 012 533 1.02 Junction Business Centre, 22 St Kilda Road St Kilda VIC 3182

SCRATCH RESISTANCE

STÄRKE Ambiance uPVC frames are durable and resilient, however, it is possible to scratch them with a sharp object or similar. The frames are supplied to site with a tape applied for protection. If the frames do become scratched, the uPVC profile is coloured through the entire profile helping small scratches to blend in easily. However for more visible defects there are three alternative methods listed below, in order of difficulty and cost.

REPAIR METHODS

MARKER PEN

This option is the simplest and fastest way to cover small scratches and scuffs on uPVC profiles. It involves using a marker pen specifically designed for touch-ups on uPVC profiles. These contain a special ink, and are available in many different colours.

WAX

Wax is a hard and durable filler. This option is typically used for high use areas and deep scratches. It is melted into place to ensure a secure bond with the uPVC profile, and it is available in a large range of colours. The finish matches the uPVC profile to ensure it blends in with the profile.

RE-FOIL

Re-foiling is the solution if the other options are not suitable. This involves removing the existing foil over the entire length of the affected profile and applying a new foil to cover the profile. It is applied with heat to bond to the uPVC profile and is available in multiple colours and finishes to match the existing profiles.

NZS4211 SUMMARY

Stärke Ambiance 70mm Inline Window System

Product	Test Report Number	Standard Acheived	Water Penetration	ULS	SLS	Air Leakage	Max Sqm (m2)
OI Hinge door 2.1 × 1.1	AS-228A	NZS 4211:2008	455Pa	±4000Pa	±1515Pa	Pass A/C	Test-2.31 +15% - 2.65
OO Hinge door 2.1 × 1.15	AS-227A	NZS 4211:2008	900Pa	±4000Pa	N/R	Pass A/C	Test-2.415 +15% - 2.77
OO French Door 2.1 × 2.23	AS-229A	NZS 4211:2008	600Pa	±4000Pa	±1515Pa	Pass A/C	Test-4.683 +15%-5.39
Fixed Window 2.01 × 2.1	AS-230A	NZS 4211:2008	455Pa	±2500Pa	±1515Pa	Pass A/C	Test-4.22 +15%-4.85
Fixed Window 1.8 × 0.8	SWTL	AS/NZS 4284	1500Pa Cyclic	±7000Pa	±2500Pa	Pass A/C	Test-1.44 +15%-1.656
VarioSlide 2.4 × 2.5	AZT00499 .23	NZS 4211:2008	300Pa	±2000Pa	±1250Pa	Pass A/C	Test-6 +15%-6.9
Tilt & Turn Window 2.1 × 1.2	AS-230A	NZS 4211:2008	455Pa	±2500Pa	±1515Pa	Pass A/C	Test-2.52 +15%-2.9
SmartSlide 2.39 × 2.6	AS-225A	NZS 4211:2008	600Pa	±3000Pa	±1515Pa	Pass A/C	Test-6.214 +15%-7.15

NZS3604 Wind Pressures

	Low	Medium	High	Very High	X High	Xtreme
ULS	720	960	1360	1760	2130	2500
SLS	510	680	970	1250	1515	n/a
Water	153	204	291	375	455	n/a
m/s	32	37	44	50	55	65

ACOUSTIC TEST REPORT

uPVC Acoustic Datasheet

Glazing Spec	RW (C, CTR) Glazing (DB)	RW (C, CTR) Window (DB)	Report Number
4/16/4 T AR thermal spacer + argon)	31(-2,-5)	34(-2,-5)	LA-01228:b/2010
6/16/4 T Ar	34(-1,-5)	38(-2,-6)	
6/16/6 T Ar	35(-3,-7)	37(-2,-4)	
44.2/16/4 T Ar	37(-1,-5)	41(-2,-5)	
44.2/16/6 T Ar	39(-4,-8)	41(-2,-5)	
33.1f.acoustic./16/6 T Ar	40(-2,-6)	43(-2,-6)	
44.2f.acoustic./16/6 T Ar	41(-2,-6)	43(-2,-5)	
8 VSG TF/16/6	42	42(-2,-6)	16129751/Z02 R1
9 VSG Si/16/6	41	42(-2,-5)	16129751/Z01 R1
9 VSG Si/16/10	45	44(-1,-2)	16129751/Z03 R1
13 VSG Si/19/9 VSG Si	48	45(-1,-3)	16129751/Z05 R1
4/16/4		33	010424.S24
6/16/4		37	010424.S21
10/16/4		39	001127.P14

BURGLAR INTRUSIONS

Product	Class
Fixed	RC2
Awning/Casement	RC1
Tilt & Turn	RC2
Hinged Door	RC2
Varioslide	RC1
SmartSlide	RC2
LiftSlide	RC2
Invisifold	RC1

RC stands for Resistance Class and is the measure in the European classification system DIN EN 1627 for the performance of windows and doors against forced entry attempts.
There are 7 resistance class specifications, ranging up to RC6.

RC1	RC2
Attempted break-in with physical force such as kicking, jumping against, pushing up or similar.	Attempted break-in with simple tools such as screw-drivers, pliers and wedges, pliers and wedges to break open the window
Resistance time required = none	Resistance time required = 3 minutes

AWNING SIZE MATRIX

Matrix	
✓	Possible
✓	Not Recommended
✗	Cannot Do

Notes
Where an asterisk (*) is present, this unit cannot be done in toughened glass.

Double Glazing

Without Restrictors

HEIGHT \ WIDTH	600	700	800	900	1000	1100	1200	1300	1400	1500	1600
600	✓	✓	✓	✓	✓	✓	✓	✓	✓	✓	✗
700	✓	✓	✓	✓	✓	✓	✓	✓	✓	✓	✗
800	✓	✓	✓	✓	✓	✓	✓	✓	✓	✓	✗
900	✓	✓	✓	✓	✓	✓	✓	✓	✓	✓	✓
1000	✓	✓	✓	✓	✓	✓	✓	✓	✓	✓	✓
1100	✓	✓	✓	✓	✓	✓	✓	✓	✓	✓	✓
1200	✓	✓	✓	✓	✓	✓	✓	✓	✓	✓	✓
1300	✓	✓	✓	✓	✓	✓	✓	✓	✓	✓	✓*
1400	✓	✓	✓	✓	✓	✓	✓	✓	✓	✓*	✓*
1500	✓	✓	✓	✓	✓	✓	✓	✓	✓*	✗	✗
1600	✓	✓	✓	✓	✓	✓	✓	✓*	✓*	✗	✗

With Restrictors

HEIGHT \ WIDTH	600	700	800	900	1000	1100	1200	1300	1400	1500	1600
600	✓	✓	✓	✓	✓	✓	✓	✓	✓	✓	✗
700	✓	✓	✓	✓	✓	✓	✓	✓	✗	✗	✗
800	✓	✓	✓	✓	✓	✓	✓	✗	✗	✗	✗
900	✓	✓	✓	✓	✓	✗	✗	✗	✗	✗	✗
1000	✓	✓	✓	✓	✓	✓	✗	✗	✗	✗	✗
1100	✓	✓	✓	✓	✓	✓*	✗	✗	✗	✗	✗
1200	✓	✓	✓	✓	✓	✓	✓	✓	✓	✓	✗
1300	✓	✓	✓	✓	✓	✓	✓	✓	✓	✓	✓*
1400	✓	✓	✓	✓	✓	✓	✓	✓	✓	✓*	✓*
1500	✓	✓	✓	✓	✓	✓	✓	✓	✓*	✗	✗
1600	✓	✓	✓	✓	✓	✓	✓	✓*	✓*	✗	✗

AWNING SIZE MATRIX

Matrix	
✓	Possible
✓	Not Recommended
✗	Cannot Do

Notes
Where an asterisk (*) is present, this unit cannot be done in toughened glass.

Triple Glazing

Without Restrictors

HEIGHT	WIDTH										
	600	700	800	900	1000	1100	1200	1300	1400	1500	1600
600	✓	✓	✓	✓	✓	✓	✓	✓	✗	✗	✗
700	✓	✓	✓	✓	✓	✓	✓	✓	✗	✗	✗
800	✓	✓	✓	✓	✓	✓	✓	✓	✓	✓	✗
900	✓	✓	✓	✓	✓	✓	✓	✓	✓	✓	✓
1000	✓	✓	✓	✓	✓	✓	✓	✓	✓	✓	✓
1100	✓	✓	✓	✓	✓	✓	✓	✓	✓	✓	✓
1200	✓	✓	✓	✓	✓	✓	✓	✓*	✓*	✗	✗
1300	✓	✓	✓	✓	✓	✓	✓*	✓*	✗	✗	✗
1400	✓	✓	✓	✓	✓	✓*	✓*	✗	✗	✗	✗
1500	✓	✓	✓	✓	✓*	✓*	✗	✗	✗	✗	✗
1600	✓	✓	✓	✓	✓*	✗	✗	✗	✗	✗	✗

With Restrictors

HEIGHT	WIDTH										
	600	700	800	900	1000	1100	1200	1300	1400	1500	1600
600	✓	✓	✓	✓	✓	✓	✓	✗	✗	✗	✗
700	✓	✓	✓	✓	✗	✗	✗	✗	✗	✗	✗
800	✓	✓	✓	✓	✗	✗	✗	✗	✗	✗	✗
900	✓	✓	✓	✗	✗	✗	✗	✗	✗	✗	✗
1000	✓	✓	✓	✓	✗	✗	✗	✗	✗	✗	✗
1100	✓	✓	✓	✗	✗	✗	✗	✗	✗	✗	✗
1200	✓	✓	✓	✓	✓	✓	✓	✓*	✓*	✗	✗
1300	✓	✓	✓	✓	✓	✓	✓*	✓*	✗	✗	✗
1400	✓	✓	✓	✓	✓	✓*	✓*	✗	✗	✗	✗
1500	✓	✓	✓	✓	✓*	✓*	✗	✗	✗	✗	✗
1600	✓	✓	✓	✓	✓*	✗	✗	✗	✗	✗	✗

RECYCLED CONTENT

Parts of the following document have been translated into English

Gütegemeinschaft Kunststoff-Fensterprofilsysteme e.V.

KUNSTSTOFF FENSTERPROFILSYSTEME | RAL

Am Hofgarten 1–2 | 53113 Bonn
Telefon +49 (0) 228 766 76 54
Telefax +49 (0) 228 766 76 50

Deutsche Bank AG, Bonn
IBAN DE71 3807 0059 0028 5296 00
BIC DEUTDEDK380

Commerzbank AG, Bonn
IBAN DE42 3804 0007 0101 8787 00
BIC COBADEFF380

Sitz: Bonn
Amtsgericht: Bonn
VR 9064
USt.-IdNr. DE815130783
St.-Nr. 205/5774/032

Gütegemeinschaft Kunststoff-Fensterprofilsysteme e.V. | Am Hofgarten 1–2 | 53113 Bonn

aluplast GmbH
Herr Arno Bender
Auf der Breit 2
76227 Karlsruhe

July 5, 2022

Confirmation of the recycled content of window profiles of the aluplast IDEAL 7000 system

Dear Mr. Bender

Your company aluplast applied to our quality association for confirmation of the recyclable content of the following profiles of the IDEAL 7000 system. For this purpose, we received the dimensioned cross-sectional drawings of these profiles from you, on which the mass proportions of virgin material and recyclable material (rPVC) are specified. These mass proportions result from the design of the extrusion tool and are therefore tool-related. Fluctuations are only possible to a small extent. The following recyclable proportions result from the documents mentioned:

Profile number Article number	Designation	Mass of fresh material (g/m)	Mass rPVC (g/m)	Mass fraction rPVC (%)
170 002/302/402 0000013 170 002 0000013	Frame	538	919	63,1
170 020/320/420 0000013 170 020 0000013	Sash	701	822	54,0
TOTAL Window	Frame + Sash	1239	1741	**58,4**

Summary:

- A window consisting of the above-mentioned profiles from the aluplast IDEAL 7000 system has a mass proportion of recycled material of >55%.
- According to the statement of our quality association dated August 6, 2019 on the use of recycled materials in window profiles, retention samples with recognizable profile markings should be kept when producing windows for specially funded building projects. This means that, upon request (e.g. from the funding body), an analysis of the recycled content of the profiles used for a project can be carried out subsequently.

Best regards
Quality Association for Plastic Window Profile Systems
e.V. I.A. Bernhard Elias

info@gkfp.de
www.gkfp.de

PRODUCT TECHNICAL STATEMENT

KEY INFORMATION

1.0

Summary of Description of Building Product

Stärke Ambiance Inline Window system uPVC windows and doors are a standard New Zealand residential joinery range which can be double or triple glazed. They include:

- Fixed, Awning and Casement Open Out Windows
- Tilt & Turn Open-In Windows
- VarioSlide Sliding & Stacking Doors
- Smartslide Sliding Doors
- Liftslide Sliding Doors
- Inward and outward opening French Doors

*Continuation of intended use can be found in item **9. Supporting information about Intended use of Building Product or Method.***

*Matters that should be taken into account in the use or application of the building product can be found in **6. Conditions and Limitations of Use**.*

2.0

Summary of Intended Use of Building Product

Stärke Ambiance Inline Window system uPVC windows and doors are for use as part of the building envelope in residential buildings. They contribute to natural daylight and ventilation and are suitable for use in building envelopes enclosing spaces where the temperature and/or humidity are modified.

*Continuation of intended use can be found in item **8. Supporting information about intended use of Building Product**.*

3.0

Building Code Provisions

The clauses of the New Zealand Building Code that are relevant to the intended use and with which the building product complies or contributes to (where used as part of a system)

- **B1 Structure:** B1.3.1; B1.3.2; B1.3.3 (a, b, h); B1.3.4
- **B2 Durability:** B2.3.1(b); B2.3.1(c) (For Hardware)
- **E2 External Moisture:** E2.3.2; E2.3.7
- **E3 Internal Moisture:** E3.3.1 (contributes to)
- **F2 Hazardous Building Materials:** F2.3.1, F2.3.3
- **F4 Safety from Falling:** F4.3.1
- **G4 Ventilation:** G4.3.1; G4.3.3 (contributes to)
- **G7 Natural light:** G7.3.1 (contributes to); G7.3.2 (contributes to)
- **H1 Energy Efficiency:** H1.3.1; H1.3.2E (contributes to)

*If designed, used installed & maintained in accordance with the scope of this Technical Statement, the above-mentioned product will meet the above-mentioned provisions of the NZBC. How the building method or product complies or contributes can be found in item **12. Basis for Certification**. Any qualification on the extent of that compliance can be found in item **6. Conditions and limitations of use**.*

4.0

Conditions and Limitations of Use

Stärke Ambiance Inline Window system Suite uPVC Windows and Doors must be installed in accordance with the WANZ guide to Window Installation, and NZBC E2/AS1 or as according to Starke specific installation detailing.

Product must be maintained in accordance with the Stärke Maintenance and Care Guide.

All products detailed below are suitable for use in the EXTRA HIGH wind zones (as defined in NZS3604)

- Stärke Ambiance Inline Window system Fixed window up to 2100mm high x 3210mm wide
- Stärke Ambiance Inline Window system Fixed window up to 1400mm high x 1600mm wide
- Stärke Ambiance Inline Window system Hinged Door open out up to 2100mm high x 1150mm wide
- Stärke Ambiance Inline Window system Hinged Door open in up to 2100mm high x 1400mm wide
- Stärke Ambiance Inline Window system Hinged French Door open out up to 2100mm high x 2230mm wide
- Smartslide Sliding Doors up to 2.64m high x 5.8m wide
- Liftslide Sliding Doors up to 2.64m high x 8m wide

All products detailed below are suitable for use in the VERY HIGH wind zones (as defined in NZS3604)

- VarioSlide Sliding & Stacking Doors up to 2400mm high x 5800mm wide

The following attributes shall be determined specifically:

- Vision barriers must be specified when required for compliance with NZBC F2.3.2
- Safety glazing must be specified when required for compliance with NZBC F2.3.3
- Suitable restrictor stays must be specified when required for compliance with NZBC F4.3.1

NOTE: *Together, items 3,4,5 and 6 define the scope of use.*

5.0

Health and Safety Information

The compliance with any manufacturer's installation instructions, OH&S statements, MSDS's and other Health and Safety declarations will provide the necessary Health and Safety Information pertaining to the product.

6.0

Signatures

Name and signature of the Product Technical Statement issuer's authorised representative

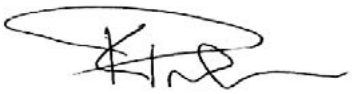

Ken Pridham
Commercial Director

For and on behalf of Stärke Group Limited

7.0

Supporting Information About Description

The following models of windows and doors are covered by this certificate:

- Stärke Ambiance Inline Window system Fixed window up to 2100mm high x 3210mm wide
- Stärke Ambiance Inline Window system Awning window up to 1400mm high x 1600mm wide
- Stärke Ambiance Inline Window system Hinged Door open out up to 2100mm high x 1150mm wide
- Stärke Ambiance Inline Window system Hinged Door open in up to 2100mm high x 1400mm wide
- Stärke Ambiance Inline Window system Hinged French Door open out up to 2100mm high x 2230mm wide
- VarioSlide Sliding & Stacking Doors up to 2400mm high x 7000mm wide
- Smartslide Sliding Doors up to 2.64m high x 5.8m wide
- Liftslide Sliding Doors up to 2.64m high x 8m wide

8.0

Supporting Information About Intended Use

Stärke Ambiance Inline Window system Suite Windows and Door assemblies are for use in private houses, office blocks, and public and commercial buildings. Product must be installed as per NZBC E2/AS1, or Starke specific installation details and maintained in accordance with the Stärke Maintenance and Care Guide.

9.0

Supporting Information About Conditions and Limitations of Use

Stärke Ambiance Inline Window system Window and Door assemblies must be fabricated by Stärke Group Limited, 4 Wilco Place Wiri (www.starke.co.nz).

*All conditions and limitations of use are stated above in item **6. Conditions and Limitations of use**.*

10.0

Basis for Compliance

- **B1 Structure:** by testing and compliance with verification method B1/VM1 and referenced standard NZS4211: 2008
- **B2 Durability:** By analysis and comparison with Verification Method B2/VM1
- **E2 External Moisture:** By testing and comparison with Acceptable Solution E2/AS1 and referenced standard NZS4211: 2008
- **E3 Internal Moisture:** By analysis and comparison with Acceptable Solutions E3/AS1, G4/AS1 and H1/AS1
- **F2 Hazardous Building Materials:** By comparison with the provisions of Acceptable Solution F2/AS1
- **F4 Safety From Falling:** By comparison with the provisions of Acceptable Solution F4/AS1
- **G4 Ventilation:** By comparison with the provisions of Acceptable Solution G4/AS1
- **G7 Natual Light:** By comparison with the provisions of Acceptable Solution G7/AS1
- **H1 Energy Efficiency:** By comparison with the provisions of Acceptable Solution H1/AS1

11.0

Supporting Documentation

- New Zealand Standard 4211: 2008 Specification and performance of Windows
- Australian Standard 2047: 2014 Windows and External Glazed Doors
- WGANZ Guide to window installation Version 1.5 1 August 2019
- Acceptable Solutions and Verification Methods for New Zealand Building Code:
    - Clause B1 Structure 1st Edition (Amendment 19) 28 November 2019 (B1/VM1)
    - Clause B2 Durability 2nd Edition (Amendment 12) 28 November 2019 (B2/VM1)
    - Clause E2 External Moisture 3rd Edition (Amendment 10) 5 November 2020 (E2/AS1)
    - Clause E3 Internal Moisture 2nd Edition (Amendment 6) 1 Jan 2017 (E3/AS1)
    - Clause F2 Hazardous Building Materials 1st Edition (amendment 3) 1 Jan 2017 (F2/AS1)
    - Clause F4 Safety from Falling 3rd Edition (amendment 2) 1 Jan 2017 (F4/AS1)
    - Clause G4 Ventilation 4th Edition 27 June 2019 (G4/AS1)
    - Clause G7 Natural Light 1st Edition (Amendment 2) 14 February 2014 (G7/AS1)
    - Clause H1 Energy Efficiency 4th Edition (Amendment 4) 28 November 2019
- Highbrook Windows testing Laboratory REPORT NO. AS-228A Open In Hinge Door to NZ4211 (available from Stärke)
- Highbrook Windows testing Laboratory REPORT NO. AS-227A Open Out Hinge Door to NZ4211 (available from Stärke)
- Highbrook Windows testing Laboratory REPORT NO. AS-229A Open Out French Door to NZ4211 (available from Stärke)
- Highbrook Windows testing Laboratory REPORT NO. AS-230A Awning and Fixed Window to NZ4211 (available from Stärke)
- Stärke Maintenance and Care Guide Jan 2019

12.0

Conditions Relating to Specification

This Product Technical Specification can only be reproduced in full and is a controlled document. Current as:

- Version 1.1, 18 January 2022

Latest versions of Product Technical Specifications can be obtained by contacting Stärke Group Ltd directly as per contact details.

13.0

Warranty

Stärke Ambiance Inline Window system Suite Windows & doors have a 10-year manufacturer's warranty.
For more details, please contact Stärke for a copy of our Terms and Conditions.

APPENDIX

ENGINEERING JUDGEMENT

This engineering judgement undertaken by Oculus Engineering of the STÄRKE Ambiance uPVC Inline Window System includes testing, performance and compliance of our recessed uPVC system.

Scan the QR code to download the engineering judgement

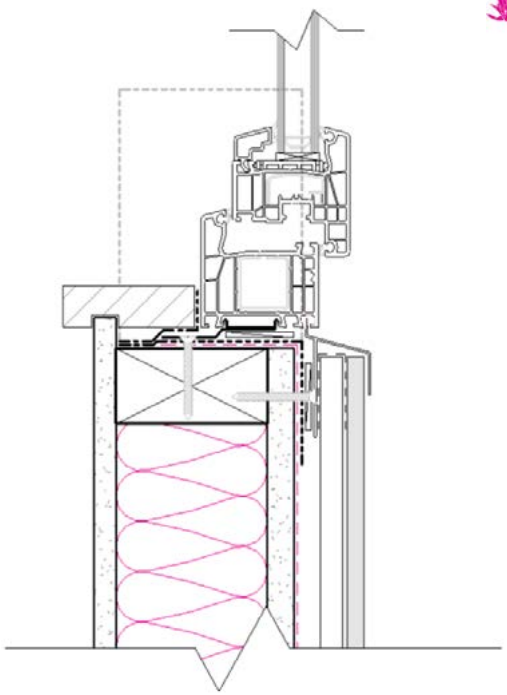

STARKE Ambiance Inline Window System

Engineering Judgement

Author: Erik Todorov 27/09/22 Job: J-00025

AMBIANCE UPVC SUSTAINABLE ENGINEERING REPORT

14 November 2022

Starke Ambiance SELtd Accepted Joinery

Twenty-one frame profiles of Starke Ambiance frames have been modelled by Starke to determine Uf value and fRsi of the frames. Sustainable Engineering has reviewed these reports and collated the data for use in PHPP.

Boundary conditions are set per ISO 10077-2 in Flixo Frame software.

Table 1: PHPP Data

Window frames									
		U_f-Value				Frame width			
ID	Description	left	right	bottom	above	left	right	bottom	above
		W/(m²K)	W/(m²K)	W/(m²K)	W/(m²K)	m	m	m	m
01ud	Starke Ambiance Fixed White	1.30	1.30	1.30	1.30	0.070	0.070	0.070	0.070
02ud	Starke Ambiance Awning White	1.34	1.34	1.34	1.34	0.117	0.117	0.117	0.117
03ud	Starke Ambiance Tilt & Turn White	1.38	1.38	1.38	1.38	0.119	0.119	0.119	0.119
04ud	Starke Ambiance Hinge Door White	1.43	1.43	1.43	1.43	0.147	0.147	0.147	0.147
05ud	Starke Ambiance Sliding Door Fixed	1.37	1.62	1.34	1.34	0.056	0.055	0.056	0.056
06ud	Starke Ambiance Sliding Door Operable	1.62	1.52	1.52	1.56	0.055	0.145	0.145	0.145
07ud	Starke Ambiance Fixed Black	1.34	1.34	1.34	1.34	0.070	0.070	0.070	0.070
08ud	Starke Ambiance Awning Black	1.36	1.36	1.36	1.36	0.117	0.117	0.117	0.117
09ud	Stake Ambiance Tilt & Turn Black	1.47	1.47	1.47	1.47	0.119	0.119	0.119	0.119
10ud	Starke Ambiance Hinge Door Black	1.44	1.44	1.44	1.44	0.147	0.147	0.147	0.147

Note that the Sliding door operable head and jamb fails the PHPP9 fRSI criteria in warm and warm-temperate climates. We recommend discussing with your certifier and using the PHPP10 criteria.

Both Black and White options meet the fRSI criteria for PHPP9 in warm and warm-temperate climates.

sustainable engineering LTD

Table 2: White

Window Frame	Uf [W/(m²K)]	Frame height (m)	fRsi
Fixed	1.30	0.070	0.73
Awning	1.34	0.117	0.68
Hinge Door	1.43	0.147	0.74
Tilt and Turn	1.38	0.119	0.66
Mullion Double Tilt Turn	1.07	0.166	0.65
Mullion Fixed	1.39	0.084	0.74
Mullion One Tilt and Turn Sash	1.48	0.125	0.67

Table 3: Black

Window Frame	Uf [W/(m²K)]	Frame height (m)	fRsi
Fixed	1.34	0.070	0.73
Awning	1.36	0.117	0.68
Hinge Door	1.44	0.147	0.65
Tilt and Turn	1.47	0.119	0.65
Mullion Double Tilt Turn	1.07	0.166	0.65
Mullion Fixed	1.39	0.084	0.74
Mullion One Tilt and Turn Sash	1.48	0.125	0.67

Table 4: Sliding

Window Frame	Uf [W/(m²K)]	Frame height (m)	fRsi
Fixed Head	1.34	0.056	0.72
Fixed Jamb	1.37	0.056	0.72
Fixed Sill	1.34	0.056	0.72
Mullion	1.62	0.109	0.67
Sliding Head	1.56	0.145	0.53
Sliding Jamb	1.52	0.145	0.54
Sliding Sill	1.52	0.145	0.55

14 November 2022

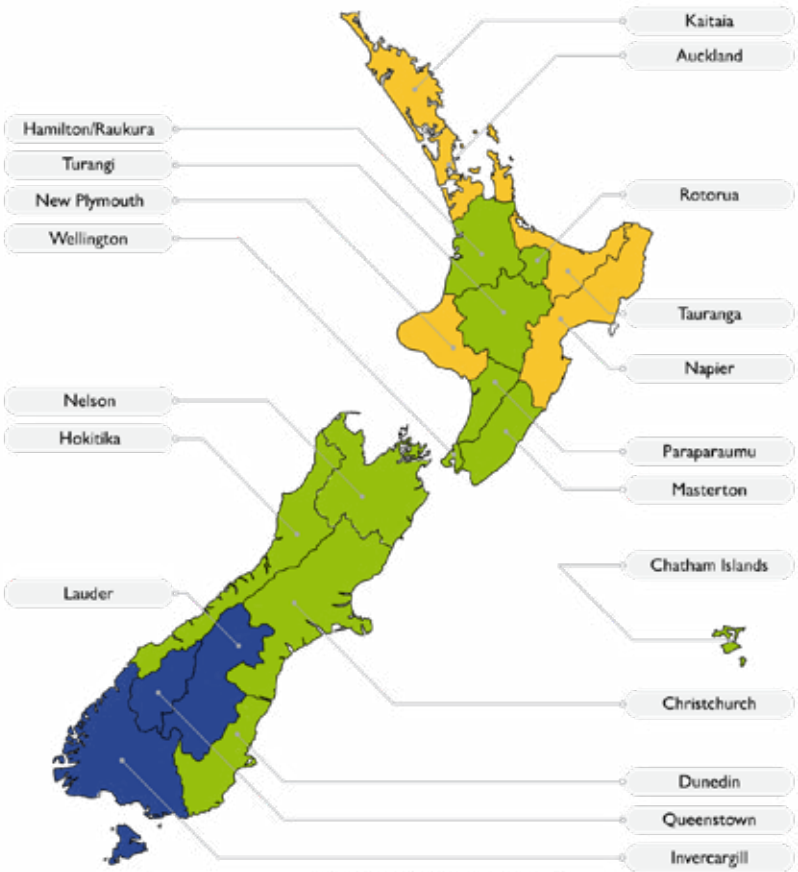

Climate zone	Minimum Temperature Factor fRSI = 0.25 m²K/W
Arctic	0.80
Cold	0.75
Cool-temperate	0.70
Warm-temperate	0.65
Warm	0.55
Hot	-
Very hot	-

Figure 1: This map shows the three different fRSI zones at the weather station altitudes. The climate zone and thus the fRSI requirements also vary with altitude as the average temperatures typically drop by 0.6C per 100m of elevation gain. In general these zones can be used without considering the elevation change. Illustration: Sustainable Engineering Ltd. fRSI requirements from [PHI Passive House Standard Building Criteria](#).

THERMAL CALCULATIONS

oculus

4 May 2022

Project Reference: Starke Windows J-00025

Benjy Simmons
Stärke Windows

Email: benjy@starke.co.nz

Dear Benjy,

Please find the results of our isothermal detail review as per table below.

1. BACKGROUND

Oculus reviewed the frame installation as follows:

	U_f	U_{wall}	$\psi_{Installation}$	$fRS_{i\ installation}$
Starke 70 – **wd frame, gyp, recessed win sill, gen clad**	1.39 W/m²K	0.327 W/m²K	0.082 W/mK	0.653
Starke 125 **- wd frame, gyp, recessed slider sill, gen clad**	2.26 W/m²K	0.223 W/m²K	0.081 W/mK	0.484
Starke 140 **- wd frame, gyp, recessed dr sill, gen clad**	1.23 W/m²K	0.223 W/m²K	0.051	0.610

Kind Regards,

Denise Martin

THERMAL CALCULATIONS

Oculus Architectural Engineering Ltd
Denise Martin

Starke 70 fRSi

$\theta si\ min_{A-B}$ = 13.07 °C
f_{Rsi} = 0.653
$\varphi_{si(50\%)}$ = 78%

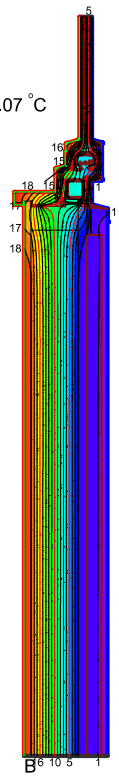

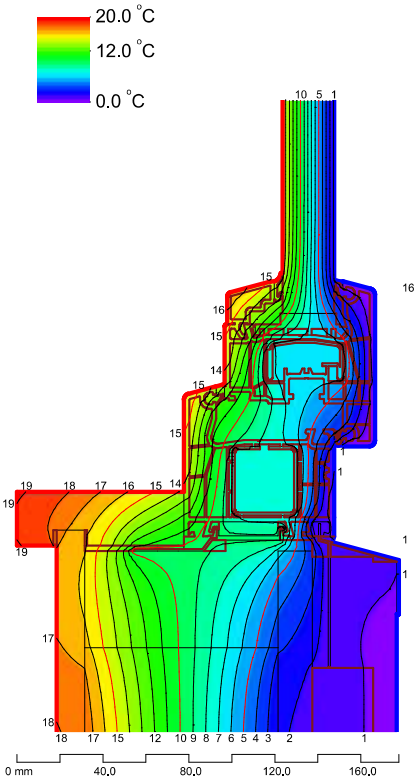

Boundary Condition	q[W/m²]	θ[°C]	R[(m²·K)/W]	ε
Epsilon 0.9				0.900
Psi-Aussen, Wand (1)		0.000	0.040	
Symmetry/Model section	0.000			
fRsi-Innen-Wand, Decke, Boden		20.000	0.250	

Material	λ[W/(m·K)]	ε
Aluminium (Si Alloys)	160.000	0.900
EPDM (ethylene propylene diene monomer)	0.250	0.900
Elastomeric foam, flexible	0.050	0.900
Gypsum plasterboard	0.250	0.900
Mineralwolle Nennwert L=0.035	0.035	0.900
PVC (polyvinylchloride), rigid	0.170	0.900
Panel	0.035	0.900
Silicone, filled	0.500	0.900
Slightly ventilated air cavity *		
Steel	50.000	0.900
Timber 450 kg/m3 (softwoods)	0.120	0.900
Unventilated air cavity *		

* EN ISO 10077-2:2017, 6.4.3/anisotrop

5/4/2022
\\Mac\Home\Desktop\Starke Windows.flx

9

flixo pro 8.1.1005.1

THERMAL CALCULATIONS

Oculus Architectural Engineering Ltd
Denise Martin

Starke 70 - Recessed Sill

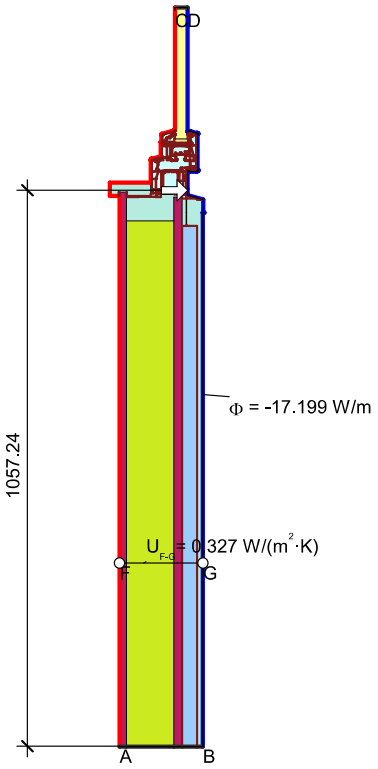

Starke 70

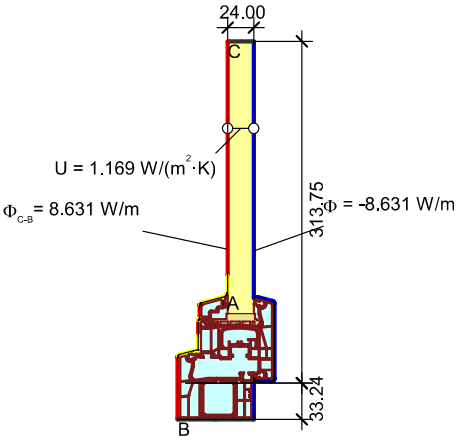

$$U_f = \frac{\frac{8.631}{20.0} - 1.169 \cdot 0.314}{0.033} = 1.95\ W/(m^2 \cdot K)$$

$$\psi_{A\text{-}E\text{-}C,\ *} = \frac{17.188}{20.0} - 0.327 \cdot 1.057 - \frac{8.631}{20.0} = 0.082\ W/(m \cdot K)$$

Boundary Condition	q[W/m²]	θ[°C]	R[(m²·K)/W]	ε
Epsilon 0.9				0.900
Psi-Aussen, Wand (1)		0.000	0.040	
Psi-Innen-Wärmestrom horizontal		20.000	0.130	
Symmetry/Model section	0.000			

Material	λ[W/(m·K)]	ε
Aluminium (Si Alloys)	160.000	0.900
EPDM (ethylene propylene diene monomer)	0.250	0.900
Elastomeric foam, flexible	0.050	0.900
Gypsum plasterboard	0.250	0.900
Mineralwolle Nennwert L=0.035	0.035	0.900
PVC (polyvinylchloride), rigid	0.170	0.900
Panel	0.035	0.900
Silicone, filled	0.500	0.900
Slightly ventilated air cavity *		
Steel	50.000	0.900
Timber 450 kg/m3 (softwoods)	0.120	0.900
Unventilated air cavity *		

* EN ISO 10077-2:2017, 6.4.3/anisotrop

Boundary Condition	q[W/m²]	θ[°C]	R[(m²·K)/W]	ε
Epsilon 0.9				0.900
Exterior, frame		0.000	0.040	
Interior, frame, normal		20.000	0.130	
Interior, frame, reduced		20.000	0.200	
Symmetry/Model section	0.000			

5/4/2022
\\Mac\Home\Desktop\Starke Windows.flx

4

flixo pro 8.1.1005.1

THERMAL CALCULATIONS

Oculus Architectural Engineering Ltd

Denise Martin

Starke 125 fRSi

$\theta si\ min_{A-B} = 9.69\ ^{\circ}C$

$f_{Rsi} = 0.484$

$\varphi_{si(50\%)} = 97\%$

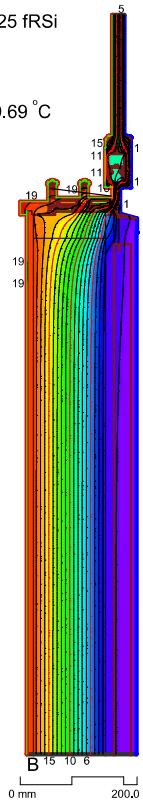

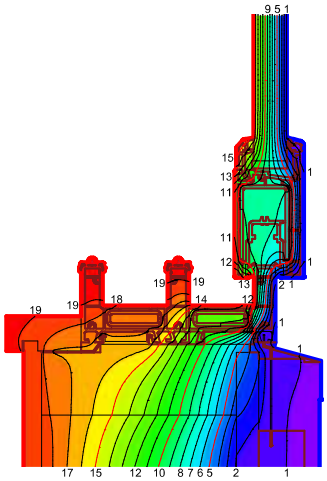

20.0 °C

12.0 °C

0.0 °C

Boundary Condition	q[W/m²]	θ[°C]	R[(m²·K)/W]	ε
Epsilon 0.9				0.900
Psi-Aussen, Wand (1)		0.000	0.040	
Symmetry/Model section	0.000			
fRsi-Innen-Wand, Decke, Boden		20.000	0.250	

Material	λ[W/(m·K)]	ε
Aluminium (Si Alloys)	160.000	0.900
EPDM (ethylene propylene diene monomer)	0.250	0.900
Elastomeric foam, flexible	0.050	0.900
Gypsum plasterboard	0.250	0.900
Mineralwolle Nennwert L=0.035	0.035	0.900
PVC (polyvinylchloride), rigid	0.170	0.900
Panel	0.035	0.900
Pile weather stripping (polyester mohair)	0.140	0.900
Silicone, filled	0.500	0.900
Slightly ventilated air cavity *		
Steel	50.000	0.900
Timber 450 kg/m3 (softwoods)	0.120	0.900
Unventilated air cavity *		

* EN ISO 10077-2:2017, 6.4.3/anisotrop

5/4/2022
\\Mac\Home\Desktop\Starke Windows.flx

9

flixo pro 8.1.1005.1

THERMAL CALCULATIONS

Oculus Architectural Engineering Ltd
Denise Martin

Starke 125 - Recessed Sill

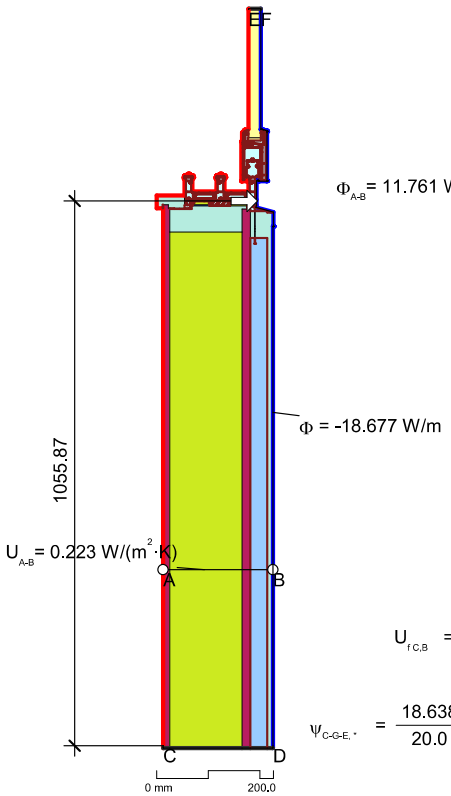

Starke 125

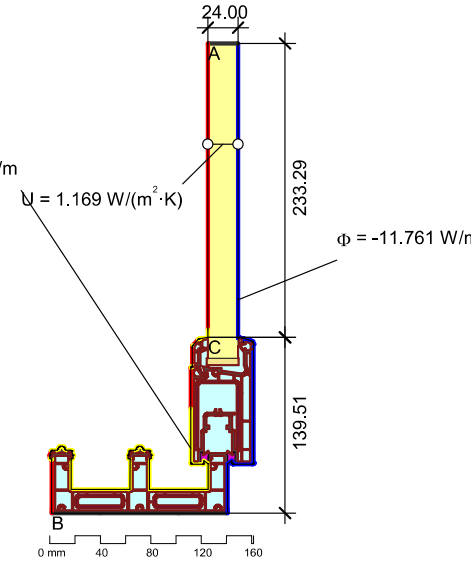

$$U_{f\,C,B} = \frac{\frac{11.761}{20.0} - 1.169 \cdot 0.233}{0.14} = 2.26\ W/(m^2 \cdot K)$$

$$\Psi_{C-G-E,*} = \frac{18.638}{20.0} - 0.223 \cdot 1.056 - \frac{12.319}{20.0} = 0.081\ W/(m \cdot K)$$

Boundary Condition	q[W/m^2]	θ[°C]	R[(m^2·K)/W]	ε
Epsilon 0.9				0.900
Psi-Aussen, Wand (1)		0.000	0.040	
Psi-Innen-Wärmestrom horizontal		20.000	0.130	
Symmetry/Model section	0.000			

Material	λ[W/(m·K)]	ε
Aluminium (Si Alloys)	160.000	0.900
EPDM (ethylene propylene diene monomer)	0.250	0.900
Elastomeric foam, flexible	0.050	0.900
Gypsum plasterboard	0.250	0.900
Mineralwolle Nennwert L=0.035	0.035	0.900
PVC (polyvinylchloride), rigid	0.170	0.900
Panel	0.035	0.900
Pile weather stripping (polyester mohair)	0.140	0.900
Silicone, filled	0.500	0.900
Slightly ventilated air cavity *		
Steel	50.000	0.900
Timber 450 kg/m3 (softwoods)	0.120	0.900
Unventilated air cavity *		

* EN ISO 10077-2:2017, 6.4.3/anisotrop

Boundary Condition	q[W/m^2]	θ[°C]	R[(m^2·K)/W]	ε
Epsilon 0.9				0.900
Interior, frame, normal		20.000	0.130	
Interior, frame, reduced		20.000	0.200	
Psi-Aussen, Wand (1)		0.000	0.040	
Symmetry/Model section	0.000			

5/4/2022
\\Mac\Home\Desktop\Starke Windows.flx

6

flixo pro 8.1.1005.1

THERMAL CALCULATIONS

Oculus Architectural Engineering Ltd
Denise Martin

Starke 140 fRSi

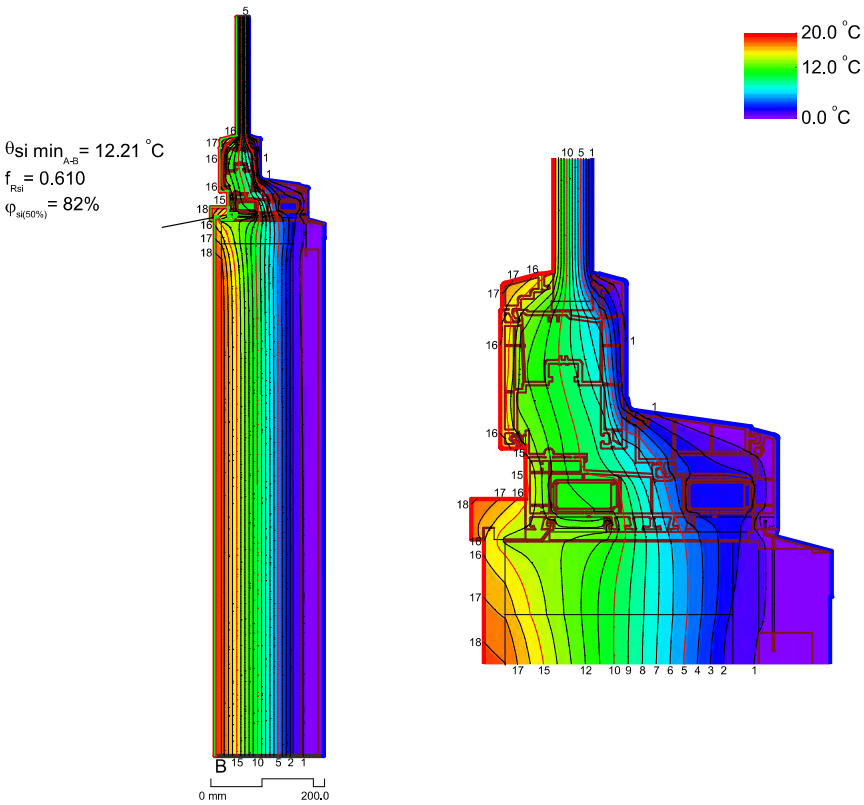

Boundary Condition	q[W/m²]	θ[°C]	R[(m²·K)/W]	ε
Epsilon 0.9				0.900
Psi-Aussen, Wand (1)		0.000	0.040	
Symmetry/Model section	0.000			
fRsi-Innen-Wand, Decke, Boden		20.000	0.250	

Material	λ[W/(m·K)]	ε
Aluminium (Si Alloys)	160.000	0.900
EPDM (ethylene propylene diene monomer)	0.250	0.900
Elastomeric foam, flexible	0.050	0.900
Gypsum plasterboard	0.250	0.900
Mineralwolle Nennwert L=0.035	0.035	0.900
PVC (polyvinylchloride), rigid	0.170	0.900
Panel	0.035	0.900
Pile weather stripping (polyester mohair)	0.140	0.900
Silicone, filled	0.500	0.900
Slightly ventilated air cavity *		
Steel	50.000	0.900
Timber 450 kg/m3 (softwoods)	0.120	0.900
Unventilated air cavity *		

* EN ISO 10077-2:2017, 6.4.3/anisotrop

5/4/2022
\\Mac\Home\Desktop\Starke Windows.flx

8

flixo pro 8.1.1005.1

THERMAL CALCULATIONS

Starke 140

Oculus Architectural Engineering Ltd
Denise Martin

Starke 140 - Recessed Sill

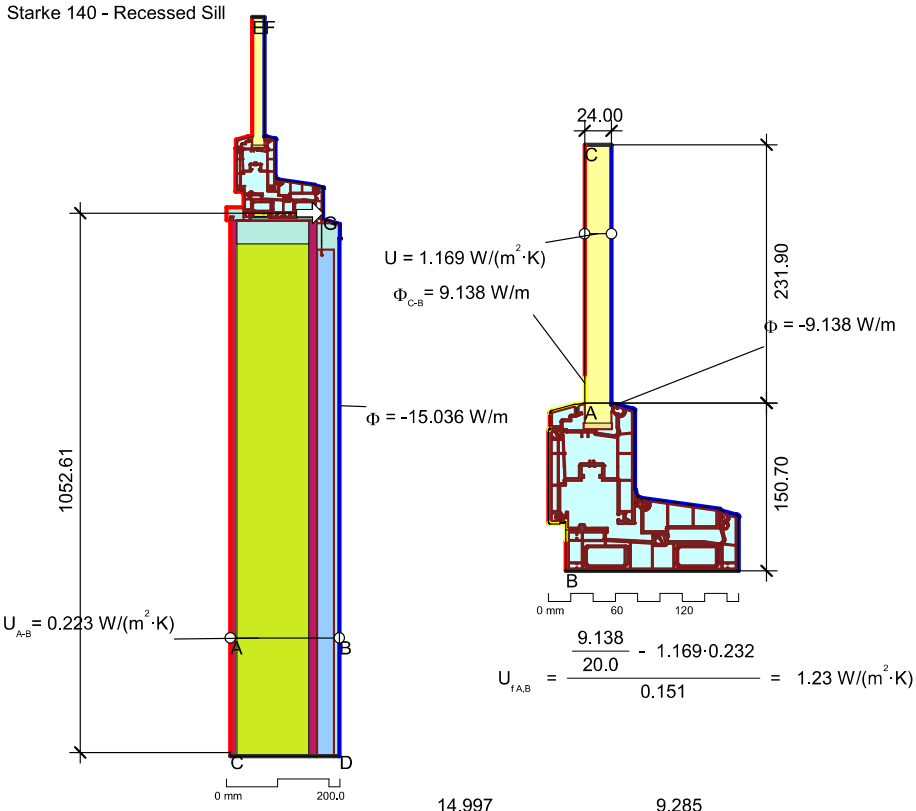

$$U_{f\,A,B} = \frac{\frac{9.138}{20.0} - 1.169 \cdot 0.232}{0.151} = 1.23\ W/(m^2 \cdot K)$$

$$\psi_{C-G-E,*} = \frac{14.997}{20.0} - 0.223 \cdot 1.053 - \frac{9.285}{20.0} = 0.051\ W/(m \cdot K)$$

Boundary Condition	q[W/m²]	θ[°C]	R[(m²·K)/W]	ε
Epsilon 0.9				0.900
Psi-Aussen, Wand (1)		0.000	0.040	
Psi-Innen-Wärmestrom horizontal		20.000	0.130	
Symmetry/Model section	0.000			

Material	λ[W/(m·K)]	ε
Aluminium (Si Alloys)	160.000	0.900
EPDM (ethylene propylene diene monomer)	0.250	0.900
Elastomeric foam, flexible	0.050	0.900
Gypsum plasterboard	0.250	0.900
Mineralwolle Nennwert L=0.035	0.035	0.900
PVC (polyvinylchloride), rigid	0.170	0.900
Panel	0.035	0.900
Pile weather stripping (polyester mohair)	0.140	0.900
Silicone, filled	0.500	0.900
Slightly ventilated air cavity *		
Steel	50.000	0.900
Timber 450 kg/m3 (softwoods)	0.120	0.900
Unventilated air cavity *		

* EN ISO 10077-2:2017, 6.4.3/anisotrop

Boundary Condition	q[W/m²]	θ[°C]	R[(m²·K)/W]	ε
Epsilon 0.9				0.900
Interior, frame, normal		20.000	0.130	
Interior, frame, reduced		20.000	0.200	
Psi-Aussen, Wand (1)		0.000	0.040	
Symmetry/Model section	0.000			

5/4/2022
\\Mac\Home\Desktop\Starke Windows.flx

7

flixo pro 8.1.1005.1

GLASS SPACER

CERTIFICATE

Certified Passive House Component

Component-ID 1547sp03 valid until 31st December 2022

Passive House Institute
Dr.Wolfgang Feist
64283 Darmstadt
Germany

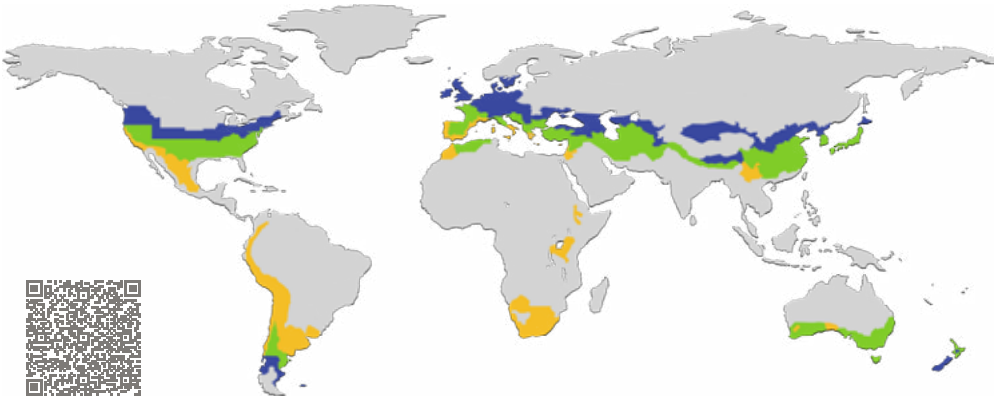

Category: **Spacer for low-E-glazing**

Manufacturer: **Technoform Glass Insulation GmbH, Lohfelden, Germany**

Product name: **Technoform-Spacer SP12, SP13, SP14**

Type
Plastic with stainless steel foil
Height Box 2
6.90 mm
Thermal conductivity Box 2
0.310 W/(m K)

This certificate was awarded based on the following criteria:

Depending on the climatic region, the spacer prevents high surface temperatures, which can cause mould. At least 3 out of the 7 reference frames fulfilled the spacer hygiene criteria for the relevant climatic region.

Hygiene $f_{Rsi} \geq 0.70$

The specific resistance of the spacer's edges is greater than the climate-independent minimum requirement.

Efficiency $R_E = 3.40\,\mathrm{m\,K/W} \geq 1.50\,\mathrm{m\,K/W}$

Passive House efficiency class	phE	phD	phC	phB	phA	phA+

cool, temperate climate

phB

CERTIFIED COMPONENT

Passive House Institute

www.passivehouse.com

Technoform Glass Insulation GmbH
Matthäus-Merian-Straße 6, 34253 Lohfelden, Germany
☎ | ✉ | http://www.technoform.com |

Description

The SP12, SP13, SP14 is a polymeric/metal hybride spacer for rigid and tight thermally improved edgebonds of insulating glazing.

Spacer height: 6.90 mm
Thermal conductivity: 0.310 W/(m K) (WA 17/1, ift Rosenheim)
Available spacer widths: 8, 10, 12, 14, 15, 16, 18, 20, 22 and 24 mm

Appropriate secondary seal	Specific edge resistance R_E	Efficiency class
Polysulfide	3.40 m K/W	phB
Polyurethane	3.40 m K/W	phB
Silicone	3.60 m K/W	phB

Explanation

Spacers are categorized into different efficiency classes based on the resistance of their edges R_E. A secondary polysulfide sealant is typically used, unless the spacer is not approved for polysulfide. A detailed report with the calculations is available from either the manufacturer or the Passive House Institute.
The Passive House Institute has defined global component requirements for seven climate regions. In principle, components that have been certified for climates with higher requirements can also be used in climates with lower requirements. This may be economically advantageous.

Use in PHPP:
If individually calculated values are not available then the thermal bridge loss coefficient specified in this document can be used. In this case, the appropriate reference frame must be selected and a 10 % safety margin should be applied.

Further information regarding certification is available
on www.passivehouse.com and www.passipedia.org .

GLASS SPACER

Reference frames calculated with Polysulfide					
Climate	Arctic	Cool	Cool temperate ✓	Warm temperate ✓	Warm ✓
Glass	Quadruple	Triple	Triple	Triple	Double
Glass package	4/12/3/12/3/12/4	6/18/2/18/6	6/16/6/16/6	6/16/6/16/6	6/16/6
Glass U-value	0.35 W/(m^2 K)	0.52 W/(m^2 K)	0.70 W/(m^2 K)	0.70 W/(m^2 K)	1.20 W/(m^2 K)
Timber-aluminium integral frame					
U_f [W/(m^2 K)]	0.48	0.62	0.73	0.87	1.03
Ψ_g [W/(m K)]	0.038	0.040	0.040	0.038	0.043
f_{Rsi} [-]	0.77	0.73	0.70 ✓	0.68 ✓	0.58 ✓
Timber-aluminium					
U_f [W/(m^2 K)]	0.54	0.57	0.75	0.97	1.19
Ψ_g [W/(m K)]	0.041	0.043	0.042	0.041	0.048
f_{Rsi} [-]	0.73	0.71	0.67	0.64	0.52
Timber					
U_f [W/(m^2 K)]	0.51	0.53	0.78	0.86	0.99
Ψ_g [W/(m K)]	0.035	0.039	0.039	0.039	0.043
f_{Rsi} [-]	0.75	0.74	0.71 ✓	0.71 ✓	0.60 ✓
Vinyl					
U_f [W/(m^2 K)]	0.70	0.75	0.82	1.02	1.16
Ψ_g [W/(m K)]	0.041	0.044	0.044	0.045	0.050
f_{Rsi} [-]	0.76	0.73	0.71 ✓	0.70 ✓	0.59 ✓
Aluminium					
U_f [W/(m^2 K)]	0.60	0.61	0.71	0.73	1.17
Ψ_g [W/(m K)]	0.043	0.048	0.049	0.049	0.055
f_{Rsi} [-]	0.77	0.76 ✓	0.74 ✓	0.74 ✓	0.61 ✓
Curtain wall timber					
U_f [W/(m^2 K)]	0.60	0.65	0.66	0.71	1.11
Ψ_g [W/(m K)]	0.056	0.065	0.057	0.057	0.069
f_{Rsi} [-]	0.71	0.70	0.67	0.67 ✓	0.53
Curtain wall aluminium					
U_f [W/(m^2 K)]	0.67	0.73	0.75	0.79	1.33
Ψ_g [W/(m K)]	0.067	0.066	0.070	0.070	0.094
f_{Rsi} [-]	0.80 ✓	0.78 ✓	0.76 ✓	0.76 ✓	0.64 ✓

Component-ID: 1547sp03 **3/4**

www.passivehouse.com

ENVIRONMENTAL PRODUCT DECELERATION

ENVIRONMENTAL PRODUCT DECLARATION

as per *ISO 14025* and *EN 15804+A2*

Owner of the Declaration	QKE Qualitätsverband Kunststofferzeugnisse e.V. GKFP Gütegemeinschaft Kunststoff-Fensterprofilsysteme e.V. EPPA European PVC Window Profiles and related Building Products Association ivzw
Programme holder	Institut Bauen und Umwelt e.V. (IBU)
Publisher	Institut Bauen und Umwelt e.V. (IBU)
Declaration number	EPD-QKE-20220002-IBG1-EN
Issue date	03.05.2022
Valid to	02.05.2027

Plastic windows (1,23 m x 1,48 m)
with double insulating glass unit

www.ibu-epd.com | https://epd-online.com

Institut Bauen und Umwelt e.V.

ECO PLATFORM EPD VERIFIED

EPPA

KUNSTSTOFF FENSTERPROFILSYSTEME | RAL

QUALITÄTSVERBAND KUNSTSTOFFERZEUGNISSE E.V. FÜR LANGLEBIGE KUNSTSTOFFPRODUKTE

1. General Information

QKE, GKFP, EPPA

Plastic windows (1,23 m x 1,48 m) with double insulating glass unit

Programme holder
IBU – Institut Bauen und Umwelt e.V.
Hegelplatz 1
10117 Berlin
Germany

Owner of the declaration
QKE – Qualitätsverband Kunststofferzeugnisse e.V.
Am Hofgarten 1–2; 53113 Bonn
Germany
GKFP – Gütegemeinschaft Kunststoff-Fensterprofilsysteme e.V.
Am Hofgarten 1–2; 53113 Bonn
Germany
EPPA – European PVC Profiles and related Building Products Association ivzw
Avenue de Cortenbergh 71; 1000 Brussels
Belgium

Declaration number
EPD-QKE-20220002-IBG1-EN

Declared product / declared unit
The declared unit consists of 1 m² of window surface area.
The reference window is a single-sash tilt and turn window 1.23 m x 1.48 m in size with double insulating glass unit and PVC-U frame material with optional surface finishing (coated, covered with PVC foil or PMMA) and possibly additionally fitted with an aluminium covering shell.
The planned replacement of individual components gasket, hardware and glazing during a 40-year service life have been included.

This declaration is based on the product category rules:
Windows and doors, 01.2021
(PCR checked and approved by the SVR)

Issue date
03.05.2022

Valid to
02.05.2027

Scope:
This declaration is an association EPD.
It covers all constructional forms for PVC windows which comply with the stated characteristics. These are both conventionally blocked and bonded window designs and different profile reinforcement and surface design variants.
Data from the production plants of the following system suppliers and window manufacturers was included:
aluplast – Ettlingen (DE)
Deceuninck – Bogen (DE), Calne (GB), Hooglede-Gits (BE), Jasin (PL), Roye (FR)
GARGIULO – Nehren (DE)
GEALAN – Bukarest (RO), Guopstos (LT), Rzgów (PL), Tanna (DE)
hapa – Herrieden (DE)
Internorm – Sarleinsbach (AT), Traun (AT)
profine – Berlin (DE), Marmoutier (FR), Pirmasens (DE)
REHAU – Srem (PL), Wittmund (DE)
Salamander –Türkheim (DE), Wloclawek (PL)
SCHÜCO – Weißenfels (DE)
TMP – Bad Langensalza (DE)
VEKA – Burgos (ES), Burnley (GB), Sendenhorst (DE), Skierniewice (PL),Thonon-les-Bains (FR)
The weighted mean of the data from eleven member companies with 27 production sites in nine countries was used as a database for manufacturing the plastic profiles. The production quantity thus recorded corresponds to approximately 80% to the European production of the profile manufacturers who are organised in the EPPA, GKFP and QKE associations.

This association EPD can be used by the member companies of the three associations EPPA, GKFP and QKE as well as window manufacturers who use this company's plastic profile systems.

The owner of the declaration shall be liable for the underlying information and evidence; the IBU shall not be liable with respect to manufacturer information, life cycle assessment data and evidences.

The EPD was created according to the specifications of *EN 15804+A2*. In the following, the standard will be simplified as *EN 15804*.

Verification

The standard *EN 15804* serves as the core PCR
Independent verification of the declaration and data according to *ISO 14025:2011*
☐ internally ☒ externally

Dipl. Ing. Hans Peters
(chairman of Institut Bauen und Umwelt e.V.)

Dr. Alexander Röder
(Managing Director Institut Bauen und Umwelt e.V.))

Dr. Eva Schmincke
(Independent verifier)

2. Product

2.1 Product description/Product definition

Single-sash window 1.23 m x 1.48 m with PVC-U frame profiles, double insulating glass unit and tilt-turn hardware.

Steel, aluminium or glass fibre extruded into the PVC material can be used as reinforcement in the PVC profiles.

The profile surface can be made with different finishes: Uncoated white, covered with PVC foil, covered with PMMA (polymethylmethacrylate), coated or fitted with a separate aluminium covering shell. This results in white or coloured, smooth or structured surfaces.

The gaskets consist of soft PVC, EPDM (ethylene-propylene-dien monomer) or TPE (thermoplastic elastomere); the hardware are mainly made of steel.

The average window for this EPD is the white steel-reinforced basic variant. However, the inputs/outputs determined from the production quantities are included for profile production, whereby all surface finishing processes which are actually performed at the plants are included.

This EPD declares the average environmental quality for the PVC windows of the member companies of the EPPA, GKFP and QKE associations. Window manufacturers who use this company's plastic profile systems can also make use of the declaration. Detailed product data is available from the respective manufacturers' specific descriptions.

EU regulation no. 305/2011 (*CPR*) applies for putting the windows on the market in the EU/EFTA (with the exception of Switzerland). The product requires a declaration of performance including the harmonised product standard *DIN EN 14351-1:2016-12* Windows and doors – Product standard, performance characteristics – Part 1: Windows and external pedestrian doorsets and also CE labelling.

The respective national regulations apply to use.

2.2 Application

Windows are inserted into the outer building shell for lighting, ventilation and weather protection.

2.3 Technical Data

The figures and/or classes shown in the following table apply to the reference on which this EPD is based. Far higher classes are being achieved depending on the design of the frame, hardware, gaskets and insulating glass unit.

Name	Value	Unit
Possible opening types	tilt-turn	-
Glazing unit structure	4 / 16 / 4	mm
Total energy transmittance g	62	%
Heat transfer coefficient glass Ug in accordance with EN 674, EN 675	1.1	W/(m²K)
Heat transfer coefficient window Uw in accordance with EN 674, EN 675	1.2	W/(m²K)
Air permeability in accordance with EN 12207	2–4	Class
Resistance to wind load in accordance with EN 12210	B1–C5	Class
Water tightness in accordance with EN 12206	4A–9A	Class
Mechanical stress (durability) in accordance with EN 12400	10000–20000	Cycles

The construction details and the performance values in accordance with the declaration of performance apply to the specific window unit put on the market by the respective manufacturer with regard to their main characteristics in accordance with harmonised product standard *DIN EN 14351-1:2016-12*, Windows and doors – Product standard, performance characteristics – Part 1: Windows and external pedestrian doorsets.

2.4 Delivery status

This EPD relates to a reference window 1.23 m x 1.48 m in size.

2.5 Base materials/Ancillary materials

The main components of the reference window are:

Name	Value	Unit
25.87 kg insulating glass unit	45.2	mass %
16.79 kg frame material, PVC-U	29.3	mass %
11.87 kg reinforcement, steel	20.7	mass %
1.83 kg hardware, steel	3.2	mass %
0.76 kg gaskets, soft PVC, EPDM, TPE	1.3	mass %
0.13 kg screws, steel	0.2	mass %
0.05 kg setting blocks, PP	0.1	mass %

The following representative generic composition for the individual formulae used by the profile manufacturers for the PVC frame is included for the EPD:

- 81.0 mass % PVC
- 8.1 mass % filler (chalk)
- 4.9 mass % impact resistance modifier
- 2.8 mass % calcium-zinc-stabilisers
- 3.2 mass % titanium oxide (TiO2) pigment

Can a partial product contain candidate materials from the *ECHA candidate list* of materials which are especially problematic for approval (as of 01/04/2020): (Substances of Very High Concern - (SVHC)) above a mass % of 0.1: Yes, the PVC profile. This may be the case if recycled PVC window material is used in the core of the product cross-section in the manufacture of this product. These profiles may contain lead compounds (CAS number 7439-92-1 of the ECHA candidate list as of 01/04/2020) at a mass of more than 0.1 %.

Does the product contain further Category 1A or 1 B CMR substances (carcinogenic, mutagenic or toxic to

reproduction) which are not on the ECHA candidate /ist at above 0.1 mass %: No.

Have biocidal products been added to this building product or has it been treated with biocidal products: No.

2.6 Manufacture

Plastic windows are made of the following components: PVC frame profiles with gaskets and if necessary reinforcement, insulating glass unit and hardware.

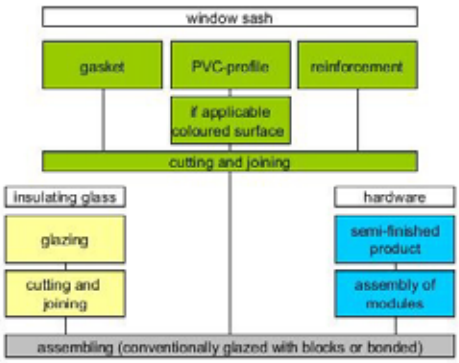

Fig. 2-1: Schematic diagram of the manufacture of a window unit

The PVC profiles are produced in an extrusion process from a mixture of PVC powder and additives. The latter protect the PVC against damage during processing and give the profile the necessary characteristics such as impact resistance, colour and weather resistance.

The PVC powder for producing the frames is a widely available mass plastic and is manufactured by polymerisation. Due to its chemical structure, PVC contains a considerable proportion of the halogen chlorine.

Coloured surfaces can be produced by fitting an aluminium covering shell, applying a foil, coating or by co-extrusion with a PMMA layer. Gaskets are either attached to the window profile in a co-extrusion process during extrusion or rolled in subsequently.

The window profiles are supplied to window manufacturers in standard lengths. There they are sawn to the lengths required for respective windows. As far as necessary, steel reinforcement is pushed in and screwed in place. The profiles are then welded, the hardware attached and the glazing and glazing beads inserted.

The steel to produce the hardware is mainly manufactured from iron ore in a furnace process through reduction with coke.

The raw material basis for the manufacture of the glazing is formed by quartz sand and the addition of various fluxing and oxidation agents (soda ash, sodium sulphate, potassium carbonate, etc.). In a further processing step, the melted raw glass is placed in a tin melt from which a flat glass ribbon is continuously drawn (float glass process).

Quality assurance

GKFP e.V. member companies are subject to external quality control as part of voluntary self-commitment. Those plastic window profile systems which may be labelled with *RAL-GZ 716* are listed on the association's website at gkfp.de/en: gkfp.de/en/product-overview/profile-systems-with-ral-quality-mark

Those window manufacturers which use the RAL quality mark in accordance with *RAL-GZ 695* are also subject to external monitoring. A list is available on the Gütegemeinschaft Fenster, Fassaden und Haustüren e.V. website (window.de/guetegemeinschaft-fenster) at: ral-fachbetriebe.fenster-können-mehr.de/

2.7 Environment and health during manufacturing

Individual measures at production plants such as the implementation of an environmental or energy management system in accordance with *ISO 14001* or *ISO 50001* are to be found in individual company profiles.

2.8 Product processing/Installation

The finished windows are transported to the construction site and built into the building structure. Galvanised steel screws are used for installation. The use of installation foam (polyurethane) is possible.

2.9 Packaging

Cardboard, polyethylene wrap and foam pads are used to transport the individual components to the window manufacturer. The frame profiles are generally transported in reusable steel cassettes and occasionally in disposal wooden pallets.

Reusable racks are normally used to deliver the windows together with foam pads and polyethylene stretch film, cardboard and polypropylene load-securing belts and aluminium or steel clamps.

If not reused, metal packaging material is recycled; other packaging is generally thermally recycled or otherwise disposed of in landfill.

Waste code according to the *European Waste Catalogue*:

- 15 01 01 Cardboard
- 15 01 02 Plastics
- 15 01 03 Solid wood and wood-based materials
- 15 01 04 Metals

2.10 Condition of use

Plastic windows are very long-lasting and durable. Their material composition does not change during use.

2.11 Environment and health during use

The environment and health are not negatively affected by the PVC frame material. This also applies to the window element as long as the use of solvent-free components is guaranteed downstream in the supply chain.

2.12 Reference service life

The service life for the product and its components is assumed as follows in accordance with *BBSR 2017*:

- 40 years for the plastic window
- 30 years for the insulating glass unit
- 30 years for the building hardware
- 20 years for the gaskets

One replacement of gaskets, hardware and glazing is included in the EPD since the service life for the components is less than that of the finished product.

2.13 Extraordinary effects

Fire

Depending on the design and surface finish, plastic windows can achieve classes E to B in accordance with *EN 13501-1* with regard to reaction to fire.

Name	Value
Building material class	E–B
Smoke production	s3
Flaming droplets	d0

Water

No effects which are detrimental to the environment occur in the event of unforeseen water exposure, such as flooding.

The watertightness of the window is influenced by the design implementation and durability of the frame profile, gasket and hardware. Different classes of water tightness are achieved accordingly (see 2.3).

Mechanical destruction

No negative effects for the environment occur on unforeseen mechanical destruction.

2.14 Re-use phase

Material recycling is easily possible and technically realised for all window components. The PVC frame material is maintained in a controlled closed circuit and reused in window profiles after reprocessing. The steel used for hardware and reinforcements can also be recycled without any loss of quality. Material recycling is also easy for the glazing but usually associated with a loss in quality.

2.15 Disposal

The individual components of the plastic window can be incinerated as non-dangerous waste (without energy recovery) or disposed of in landfill.

Waste code according to the *European Waste Catalogue*:

- 17 02 02 Glass
- 17 02 03 Plastic
- 17 04 02 Aluminium
- 17 04 05 Iron and steel

2.16 Further information

Further information is available via the websites of the associations

www.eppa-profiles.eu
www.gkfp.de/en
www.qke-bonn.de

and also those of the system houses and window manufacturers.

3. LCA: Calculation rules

3.1 Declared Unit

The declared unit consists of 1 m^2 of window area on a reference window (similar to *EN 14351-1* and *EN 17213*). Its frame area ratio F_F in relation to the overall surface area is around 28%.

Declared unit

Name	Value	Unit
Declared unit	1	m^2
Declared unit mass	31.4	kg
Reference window: Width x height	1.23 x 1.48	m
Frame area ratio	27.8	%
Mass	57.3	kg
Conversion factor reference window up to 1 m²	0.5493	-
Conversion factor to 1kg	0.0318	-

The balanced production volume used for average calculation is based on the information from the companies named in 1 'Scope'. The underlying production process varies only slightly from one manufacturer to another. It is therefore assumed that the data is representative and robust.

3.2 System boundary

The complete lifecycle from cradle to grave is examined for the declared unit. The production stage (Modules A1–A3), the construction stage (A4, A5), the use stage (B1, B2), the disposal stage (C1–C4) and benefits and loads beyond the system boundary (D) are relevant but not the further modules of the use stage (B3, B4).

Manufacturing

The aggregated illustration in the form of A1–A3 is used for manufacturing. This includes the provision of raw materials and energy, the production of steel reinforcement, glazing, hardware and PVC profile, transport of the components to the window manufacturer, the energy consumption needed for this and accruing production waste. The consumption for heating the production plants and also the attached rooms is also specifically included. However, investment goods (machines, buildings, etc.) remain ignored.

Transport from the window manufacturer to the construction site is included in Module A4 and also the auxiliary and operating materials used for installation and the disposal of packaging waste in Module A5 in accordance with *EN 17213*.

Use phase

The transmission heat losses during the use phase are included in Module B1 and the replacement of window components mentioned in 2.12 in Module B2.

Disposal

All processes which relate to the removal, dismantling or demolition of the window out of the building and which are not to be regarded at building level are calculated into Module C1.

Redistribution transports from the construction site to waste treatment fall in Module C2. Waste management processes, especially energy recovery from waste, are included in Module C3. This also includes sorting for recycling.

Disposal and also thermal waste treatment are allocated to Module C4.

Credits

Finally, Module D shows the reuse, recovery and recycling potentials beyond the system boundary.

3.3 Estimates and assumptions

Average transport distances from background date will be assumed insofar as no specific information on transports is available. This especially concerns Module A2.

Dust and emissions accruing during production or disposal are examined by means of generic data.

With regard to replacing components during use and also the dismantling of the window it is assumed that the expenses are equivalent to those of installation.

3.4 Cut-off criteria

All known inputs and outputs are included in the lifecycle. Data gaps are filled with conservative assumptions and generic data. The input flows ignored are each below 1% of the total mass or the total flow of the primary energy. In total, they each represent less than 5% of the total mass or 5% of the total energy.

3.5 Background data

The modelling of the lifecycle is performed in the *GaBi* LCA software. The background data especially for the raw materials and the production of PVC, insulating glass unit and hardware originate from the *ecoinvent 3.7* database. As specific, current and representative data as possible is used. The data used is not more than ten years old.

3.6 Data quality

Data from twelve companies with 28 production plants in nine countries are used as primary profile extrusion and window manufacturing data, see 1 'Scope'. This data collected for 2019 was checked for plausibility and consistency. Further average information originates from the associations. The quality of the

specific data is therefore to be regarded as extremely good.

At least 80% of all contributions to the core indicators of each impact category result from five background data records. Their representativeness is predominantly to be regarded as good to excellent. Data records with lower representativeness are only used in individual cases. The quality of the background data is therefore to be estimated as good overall.

3.7 Period under review

The primary data was collected for 2019.

Averages weighted with the production volume are used for production data for profile extrusion and window manufacture.

3.8 Allocation

No co-products accrue when producing the window and in further processes (Modules A1-A3). No co-product allocation is therefore necessary in foreground processes. Co-products for which an allocation is present in background data records accrue in the pre-chain for PVC, for example when producing vinyl chloride.

Energies used, auxiliary and operating materials and also waste (Modules A1-A3) are each recorded at plant level and distributed to the products across the produced mass.

Recyclates deployed (Modules A1-A3) are included in terms of a closed loop so that no allocation takes place.

In Module D, benefits and loads result from recycling PVC and metals as well as energy recovery from waste.

3.9 Comparability

Basically, a comparison or an evaluation of EPD data is only possible if all the data sets to be compared were created according to *EN 15804* and the building context, respectively the product-specific characteristics of performance, are taken into account.

This LCA was compiled with the *ecoinvent* 3.7 database.

4. LCA: Scenarios and additional technical information

Characteristic product properties
Information on biogenic Carbon

The total mass of biogenic carbon materials is less than 5 % of the total mass of the product and the associated packaging.

Basic information

The downstream technical information is the basis for the declared modules or can be used for the development of specific scenarios in the context of a building assessment if modules are not declared (MND).

Statements mainly relate to one declared unit.

Transport to the construction site (A4)

Name		Value	Unit
Specific fuel consumption per tonne kilometre	7.5 t truck	0.132	l/(t*km)
	40 t truck	0.023	l/(t*km)
Transport distance	7.5 t truck	9	km
	40 t truck	69	km

Installation into the building (A5)

The auxiliary and operating materials (e.g. fixing materials, sealants) are included in the window's LCA in accordance with *EN 17213* but not the energy consumption during installation which is to be regarded at building level in the EPD, which is why this data is for information only.

Name	Value	Unit
Polyurethane installation foam	0.180	kg
Screws	0.077	kg
Electricity consumption	0.085	kWh

Use phase (B1)

The net heat losses caused by the window are included here. These consist of the transmission heat losses and the solar gains. Since these depend very strongly on actual climatic condition at the place of installation and the technical circumstances of individual building, the environmental effects stated in this EPD are merely to be regarded as examples.

The following conditions are assumed: The calculations for heat losses and gains and the results of the impact assessment are based on parameters of average European conditions. The energy demand during the use phase at the reference location is calculated in accordance with *DIN V 18599-2*. The following applies:

Name	Value	Unit
EU degree day factor	2135	K*d
Solar radiation	155	kWh/m²a

The provision of heat energy is modelled as follows with German energy needs:

49 % Gas
25 % Heating oil
14 % District heating
12 % Other (e.g. biomass, electricity).

Maintenance (B2)

The service life for the window is calculated as 40 years in accordance with *BBSR 2017*. The replacement of individual components after reaching the end of their technical useful life (see 2.12) is included in B2 in accordance with *EN 17213*:

Name	Value	Unit
Replacement cycle : Glazing	1	Number/ RSL
Gaskets	1	Number/ RSL
Hardware	1	Number/ RSL
Electricity consumption	0.085	kWh
Polyurethane installation foam	0.180	kg
Screws	0.077	kg

End-of-life (C1–C4)

The recycling quotas and disposal routes are country-specific and deviate strongly from one another in the European area. The LCA is based on the following assumptions:

Name	Value	Unit
Collection quota across all materials	95	%
* thereof to recycling	-	
Glass	65	%
PVC	59	%
Steel/aluminium	92	%
Other	0	%
* incineration quota of the material to be disposed of	-	
Glass	25	%
PVC	35	%
Steel/alumnium	0	%
Other	20	%
Transport distance	22	km
Dismantling electricity consumption	0.085	kWh

Reuse, recovery and recycling potential (D), relevant scenario information

The energy resulting from thermal and material recycling (thermal energy and electricity) and the recycling material accruing are credited in this module as follows:

10.10 kg net flow secondary glass
4.03 kg net flow secondary PVC
2.50 kg net flow secondary Steel
3.69 MJ exported electrical energy
8.15 MJ exported thermal energy

5. LCA: Results

The net heat losses caused by the window are included for B1 use phase. The LCA results shown here are for information only as the losses depend very strongly on actual climatic conditions at the installation location and the technical circumstances of individual buildings.

DESCRIPTION OF THE SYSTEM BOUNDARY (X = INCLUDED IN LCA; ND = MODULE OR INDICATOR NOT DECLARED; MNR = MODULE NOT RELEVANT)

PRODUCT STAGE			CONSTRUCTION PROCESS STAGE		USE STAGE							END OF LIFE STAGE				BENEFITS AND LOADS BEYOND THE SYSTEM BOUNDARIES
Raw material supply	Transport	Manufacturing	Transport from the gate to the site	Assembly	Use	Maintenance	Repair	Replacement	Refurbishment	Operational energy use	Operational water use	De-construction demolition	Transport	Waste processing	Disposal	Reuse-Recovery-Recycling-potential
A1	**A2**	**A3**	**A4**	**A5**	**B1**	**B2**	**B3**	**B4**	**B5**	**B6**	**B7**	**C1**	**C2**	**C3**	**C4**	**D**
X	X	X	X	X	X	X	MNR	MNR	MNR	ND	ND	X	X	X	X	X

RESULTS OF THE LCA - ENVIRONMENTAL IMPACT according to EN 15804+A2: 1 m² of a reference window with double insulating glass unit

Core Indicator	Unit	A1-A3	A4	A5	B1	B2	C1	C2	C3	C4	D
GWP-total	[kg CO_2-Eq.]	8.00E+1	3.97E-1	1.48E+0	6.09E+1	3.52E+1	1.10E-3	9.07E-2	4.10E+0	1.72E+0	-7.07E+0
GWP-fossil	[kg CO_2-Eq.]	7.92E+1	3.96E-1	1.44E+0	5.43E+1	3.41E+1	1.09E-3	9.04E-2	4.08E+0	3.08E-1	-6.95E+0
GWP-biogenic	[kg CO_2-Eq.]	7.87E-1	1.10E-3	3.54E-2	6.57E+0	1.08E+0	8.69E-6	2.19E-4	1.61E-2	1.41E+0	-1.01E-1
GWP-luluc	[kg CO_2-Eq.]	6.03E-2	1.63E-4	7.97E-4	9.34E-3	3.30E-2	2.36E-7	3.16E-5	5.01E-4	2.16E-5	-2.27E-2
ODP	[kg CFC11-Eq.]	1.34E-5	9.17E-8	2.01E-8	7.74E-6	3.54E-6	5.34E-10	2.08E-8	1.09E-7	2.56E-8	-2.54E-6
AP	[mol H^+-Eq.]	4.60E-1	1.18E-3	5.88E-3	9.45E-2	2.48E-1	1.07E-5	5.08E-4	2.65E-3	6.64E-4	-3.45E-2
EP-freshwater	[kg P-Eq.]	3.13E-2	3.20E-5	2.17E-4	2.98E-3	1.03E-2	6.82E-8	6.37E-6	2.38E-4	2.59E-5	-3.97E-3
EP-marine	[kg N-Eq.]	8.86E-2	2.53E-4	1.89E-3	1.66E-2	4.88E-2	4.06E-6	1.86E-4	8.48E-4	3.84E-3	-6.51E-3
EP-terrestrial	[mol N-Eq.]	8.48E-1	2.74E-3	1.11E-2	1.76E-1	4.90E-1	4.45E-5	2.03E-3	6.87E-3	2.48E-3	-6.23E-2
POCP	[kg NMVOC-Eq.]	2.76E-1	1.07E-3	3.97E-3	6.61E-2	1.45E-1	1.27E-5	5.80E-4	1.93E-3	1.09E-3	-2.01E-2
ADPE	[kg Sb-Eq.]	1.26E-3	1.68E-6	7.72E-6	1.05E-4	8.08E-4	2.06E-9	3.13E-7	3.66E-6	2.54E-7	-5.86E-4
ADPF	[MJ]	1.38E+3	6.26E+0	2.13E+1	7.95E+2	4.76E+2	3.52E-2	1.40E+0	7.72E+0	1.90E+0	-1.54E+2
WDP	[m^3 world-Eq deprived]	4.29E+1	3.43E-2	1.07E+0	2.18E+0	1.53E+1	1.83E-3	6.93E-3	4.21E+0	9.73E-2	-6.15E+0

Caption	GWP = Global warming potential; ODP = Depletion potential of the stratospheric ozone layer; AP = Acidification potential of land and water; EP = Eutrophication potential; POCP = Formation potential of tropospheric ozone photochemical oxidants; ADPE = Abiotic depletion potential for non-fossil resources; ADPF = Abiotic depletion potential for fossil resources; WDP = Water (user) deprivation potential

RESULTS OF THE LCA - INDICATORS TO DESCRIBE RESOURCE USE according to EN 15804+A2: 1 m² of a reference window with double insulating glass unit

Indicator	Unit	A1-A3	A4	A5	B1	B2	C1	C2	C3	C4	D
PERE	[MJ]	7.19E+1	9.69E-2	9.62E-1	2.29E+1	3.07E+1	6.99E-4	1.92E-2	6.94E+0	9.70E-2	-1.09E+1
PERM	[MJ]	9.26E+0	0.00E+0	0.00E+0	0.00E+0	0.00E+0	0.00E+0	0.00E+0	-9.26E+0	0.00E+0	0.00E+0
PERT	[MJ]	8.12E+1	9.69E-2	9.62E-1	2.29E+1	3.07E+1	6.99E-4	1.92E-2	-2.32E+0	9.70E-2	-1.09E+1
PENRE	[MJ]	1.14E+3	6.26E+0	2.14E+1	7.95E+2	4.76E+2	3.52E-2	1.40E+0	1.73E+2	1.90E+0	-3.92E+1
PENRM	[MJ]	2.37E+2	0.00E+0	0.00E+0	0.00E+0	0.00E+0	0.00E+0	0.00E+0	-1.22E+2	0.00E+0	-1.14E+2
PENRT	[MJ]	1.38E+3	6.26E+0	2.14E+1	7.95E+2	4.76E+2	3.52E-2	1.40E+0	5.07E+1	1.90E+0	-1.54E+2
SM	[kg]	7.32E+0	0.00E+0	4.31E-2	0.00E+0	1.21E+0	0.00E+0	0.00E+0	0.00E+0	0.00E+0	1.81E+1
RSF	[MJ]	0.00E+0	0.00E+0	0.00E+0	0.00E+0	0.00E+0	0.00E+0	0.00E+0	0.00E+0	0.00E+0	0.00E+0
NRSF	[MJ]	0.00E+0	0.00E+0	0.00E+0	0.00E+0	0.00E+0	0.00E+0	0.00E+0	0.00E+0	0.00E+0	0.00E+0
FW	[m^3]	9.98E-1	7.99E-4	2.49E-2	5.08E-2	3.55E-1	4.26E-5	1.61E-4	9.80E-2	2.27E-3	-1.43E-1

Caption	PERE = Use of renewable primary energy excluding renewable primary energy resources used as raw materials; PERM = Use of renewable primary energy resources used as raw materials; PERT = Total use of renewable primary energy resources; PENRE = Use of non-renewable primary energy excluding non-renewable primary energy resources used as raw materials; PENRM = Use of non-renewable primary energy resources used as raw materials; PENRT = Total use of non-renewable primary energy resources; SM = Use of secondary material; RSF = Use of renewable secondary fuels; NRSF = Use of non-renewable secondary fuels; FW = Use of net fresh water

RESULTS OF THE LCA – WASTE CATEGORIES AND OUTPUT FLOWS according to EN 15804+A2: 1 m² of a reference window with double insulating glass unit

Indicator	Unit	A1-A3	A4	A5	B1	B2	C1	C2	C3	C4	D
HWD	[kg]	7.56E-6	0.00E+0	0.00E+0	0.00E+0	0.00E+0	0.00E+0	0.00E+0	0.00E+0	0.00E+0	0.00E+0
NHWD	[kg]	1.68E-1	0.00E+0	0.00E+0	0.00E+0	4.34E+0	2.58E-1	0.00E+0	0.00E+0	7.98E+0	0.00E+0
RWD	[kg]	6.60E-3	0.00E+0	0.00E+0	0.00E+0	0.00E+0	0.00E+0	0.00E+0	0.00E+0	0.00E+0	0.00E+0
CRU	[kg]	0.00E+0	0.00E+0	0.00E+0	0.00E+0	0.00E+0	0.00E+0	0.00E+0	0.00E+0	0.00E+0	0.00E+0
MFR	[kg]	3.56E+0	0.00E+0	0.00E+0	0.00E+0	9.20E+0	0.00E+0	0.00E+0	2.02E+1	0.00E+0	0.00E+0
MER	[kg]	0.00E+0	0.00E+0	0.00E+0	0.00E+0	0.00E+0	0.00E+0	0.00E+0	0.00E+0	0.00E+0	0.00E+0
EEE	[MJ]	0.00E+0	0.00E+0	0.00E+0	0.00E+0	0.00E+0	0.00E+0	0.00E+0	3.68E+0	0.00E+0	0.00E+0
EET	[MJ]	0.00E+0	0.00E+0	0.00E+0	0.00E+0	0.00E+0	0.00E+0	0.00E+0	8.15E+0	0.00E+0	0.00E+0

Caption	HWD = Hazardous waste disposed; NHWD = Non-hazardous waste disposed; RWD = Radioactive waste disposed; CRU = Components for re-use; MFR = Materials for recycling; MER = Materials for energy recovery; EEE = Exported electrical energy; EET = Exported thermal energy

RESULTS OF THE LCA – additional impact categories according to EN 15804+A2-optional: 1 m² of a reference window with double insulating glass unit

Indicator	Unit	A1-A3	A4	A5	B1	B2	C1	C2	C3	C4	D
PM	[Disease Incidence]	4.36E-6	2.74E-8	1.07E-7	7.54E-7	2.46E-6	2.33E-10	8.14E-9	1.67E-8	1.39E-8	-2.35E-7
IRP	[kBq U235-Eq.]	9.10E+0	3.33E-2	2.83E-2	2.36E+0	2.93E+0	1.75E-4	7.29E-3	1.07E-1	1.33E-2	-9.75E-1
ETP-fw	[CTUe]	3.14E+3	5.19E+0	5.81E+1	4.58E+2	2.26E+3	1.90E-2	1.12E+0	1.95E+2	1.73E+1	-2.75E+2
HTP-c	[CTUh]	2.47E-7	1.87E-10	1.55E-9	1.14E-8	4.49E-8	5.41E-13	4.70E-11	6.60E-10	1.07E-10	-1.02E-8
HTP-nc	[CTUh]	1.40E-6	4.30E-9	2.65E-8	1.85E-7	6.05E-7	8.41E-12	1.09E-9	5.12E-8	3.07E-9	-2.13E-7
SQP	[-]	2.99E+2	5.38E+0	1.93E+0	1.25E+2	1.34E+2	7.88E-2	1.19E+0	2.73E+0	4.13E+0	-2.95E+1

Caption	PM = Potential incidence of disease due to PM emissions; IR = Potential Human exposure efficiency relative to U235; ETP-fw = Potential comparative Toxic Unit for ecosystems; HTP-c = Potential comparative Toxic Unit for humans (cancerogenic); HTP-nc = Potential comparative Toxic Unit for humans (not cancerogenic); SQP = Potential soil quality index

Important
EP fresh water: This indicator was implemented in co-ordination with the characterisation module (EUTREND model, Strujis et al., 2009b, as in ReCiPe; http://eplca.jrc.ec.europa.eu/LCDN/developerEF.xhtml) calculated as "kg P-Eq".

Disclaimer 1 – applies to the indicator IR "Potential Human exposure efficiency relative to U235"
This impact category mainly deals with the possible impact of low-dose ionizing radiation on human health in the nuclear fuel cycle. It does not consider neither impacts due to possible nuclear accidents, occupational exposure nor due to radioactive waste disposal in underground facilities. The potential ionizing radiation emanating from the soil, from radon and from some construction materials is also not measured by this indicator.

Disclaimer 2 – applies to the indicators ADPE, ADPF, WDP, ETP-fw, HTP-c, HTP-nc, SQP "abiotic depletion potential for non-fossil resources", "abiotic depletion potential for fossil resources", "water (user) deprivation potential, deprivation-weighted water consumption", "potential comparative toxic unit for ecosystems", "potential comparative toxic unit for humans – cancerogenic", "Potential comparative toxic unit for humans - not cancerogenic", "potential soil quality index".
The results of this environmental impact indicator shall be used with care as the uncertainties with these results are high or because there is limited experienced with the indicator.

6. LCA: Interpretation

6.1 Summary

Many of the environmental impact and resource use indicators are dominated by the manufacturing phase (Modules A1–A3). In addition, the energy consumption needed to compensate heat losses through the window (Module B1), maintenance (Module B2) and to a lesser extent waste treatment (Module C3) take a major share of the indicators.

The impacts within the system boundary can be compensated by recovery and recycling potentials beyond the system boundary (Module D).

Within Modules A1–A3 the insulating glass unit, the metal components and the PVC dryblend contribute to the results to a similar extent.

Sensitivity observations show that different window designs (e.g. with regard to reinforcement material or also in relation to the dimensions) and also the surface design influence the environmental impacts of the manufacturing phase at least within the range up to ± 10%.

The largest contribution in Module B2 originates from the replacement of the glazing.

The declaration of Module B1 is optional for windows. However, since these have a significant influence on the energy household of a building it makes sense to assess their use phase. The values declared for B1 apply to the exemplary application case specified in Section 4 and are for information only. Optimisation would involve reducing transmission heat losses determined by the heat transfer coefficients and to optimise the solar gains (e.g. through alignment and shadows).

6.2 Sensitivity to the use of PVC recyclate

The impacts described above caused by the PVC frame material used change with the PVC recyclate ratio. The environmental impacts decrease in Modules A1–A3 if fresh PVC material is replaced by recyclate. In case of a share of 40% the effects here decrease by 6% on average (range -3% to -25%).

Furthermore, an increase in the proportion of recyclate in the profile results in assessment differences in Module C3 (PENRM indicator) and also smaller benefits in Module D due to the reduced quantity of PVC recyclate which crosses the system boundary. This drops on average by 24% with a 40% share of recyclate (range -51% to +9%).

Fig. 6-1 shows how greatly the total GKWP indicator in Module A1–A3 is reduced by an increase in recyclate content. The recyclate content determined for 2019 was approximately 21%.

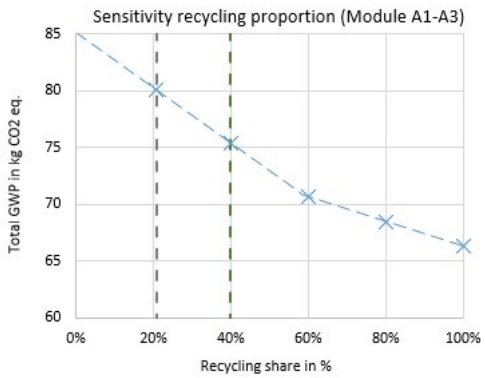

Fig. 6-1: Total GWP of the window manufacturing module (A1–A3) depending on the recyclate content

The use of PVC recyclate in the profile is, however, limited. On the one hand because unlimited amounts of recycling material are not available and on the other due to the profile design, where design or quality-related requirements can make the use of fresh material necessary.

A maximum of 40% PVC recyclate in relation to the annual tonnage of profile production appears technically realisable under these framework conditions. Individual profiles can contain a significantly higher proportion of recyclate in spite of this.

6.3 Isolated view of the impact indicators and their influencing factors

6.3.1 Environmental impacts

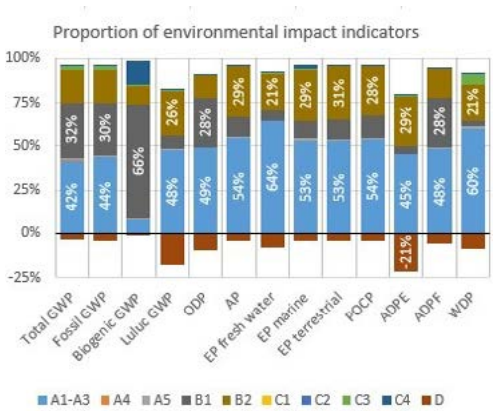

Fig. 6-2: Indicators to describe the environmental impacts, distribution per module

Global warming potential (GWP)
Greenhouse gas emissions are above all attributable to production, energy consumption in the use phase and maintenance. The most relevant greenhouse gases are carbon dioxide (fossil 83%, biogenic 9%) and methane (fossil 8%, biogenic 1%). The effects of land use changes are extremely low.

Depletion potential of the stratospheric ozone layer (ODP)
Impacts on ozone depletion mainly result from the production phase and energy consumption in the use phase. Emissions of halon 1301, halon 1211 and tetrachloromethane are mainly responsible for this.

Acidification potential of land and water (AP)
Acidification potential results above all from emissions of nitrogen oxides and sulphur oxides which occur during the production phase, maintenance and the use phase.

Eutrophication potential (EP)
The impacts on the eutrophication of water and soil originates above all from the production phase, maintenance and energy consumption in the use phase. The relevant emissions are phosphates and nitrogen oxides.

Formation potential for tropospheric ozone photochemical oxidants (POCD)
Ozone formation close to the ground is above all attributable to the production, maintenance and use phases. The relevant emissions are nitrogen oxides and volatile organic compounds without methane (NMVOC).

Abiotic depletion potential for non-fossil resources (ADPE)
The consumption of non-fossil resources results above all from production, maintenance and also use to a lesser extent. Consumption can be partly compensated beyond the system boundary (substitution of primary material). The elements which make the greatest contribution are tellurium, lead, silver, gold, zinc and copper.

Abiotic depletion potential for fossil resources (ADPF)
Fossil resources are consumed above all through the use of energy in production, use and maintenance. This concerns above all natural gas, oil and coal energy carriers.

Use of water (WDP)
Use of water results above all from energy production with hydro-electric power for production, maintenance and use. Water is, however, actually consumed in the provision of the raw materials - glass, steel and PVC.

6.3.2 Use of ressources

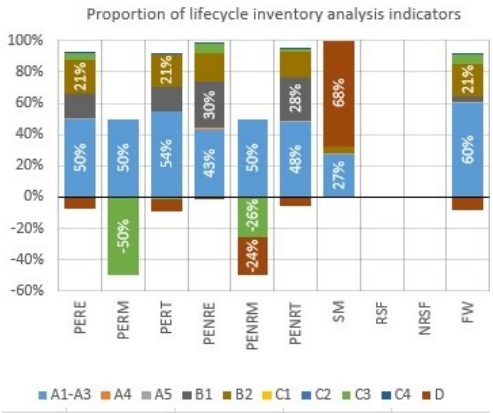

Fig. 6-3: Indicatores to describe the unse of ressources

Renewable primary energy as energy carrier (PERE) and for material use (PERM)
Renewable primary energy is used above all energetically in the production, maintenance and use phases. This is mainly biomass and hydro-electric and wind power. Material use, on the other hand, plays a smaller role; effects result from the stabiliser used.

Non-renewable primary energy as energy carrier (PENRE) and for material use (PENRM)
Non-renewable primary energy is also mainly used as energy; consumption of gas, oil and coal in the use, production and maintenance phases is relevant here. Material use in new PVC is of less significance.

Use of secondary materials (SM)
Secondary materials are used for the provision of metal components, especially steel, and also PVC and glass. Secondary materials in Module D are also provided for use beyond the system boundary.

Secondary fuels (RSF, NRSF)
The results are only partly significant due to methodical limitations. Secondary fuels are not used within the processes and data included.

Use of net fresh water (FW)
Use of water is used above all for energy production with hydro-electric power for production, maintenance and use. The consumption of fresh water results above all from the production of raw materials - glass, steel and PVC.

6.3.3 Output flows and waste categories

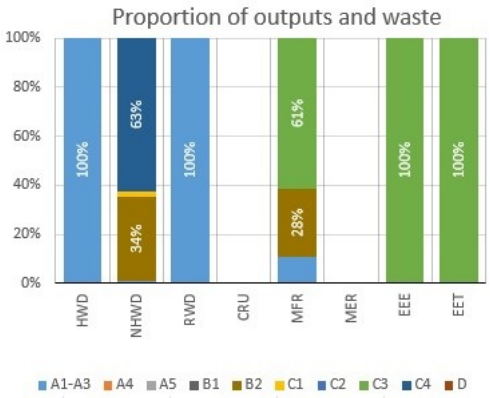

Fig. 6-4: Waste categories and output flows

Hazardous waste disposal (HWD)
The results are only partly significant due to methodical limitations. Small quantities of hazardous waste are deposited in PVC production and its pre-chains.

Non-hazardous waste disposal (NHWD)
The results are only partly significant due to methodical limitations. Non-hazardous waste accrues above all from waste disposal (Module C4) and maintenance. This is mainly deposited glass waste. On the other hand, the contribution from PVC production is extremely small.

Radioactive waste disposal (RWD)
The results are only partly significant due to methodical limitations. Contributions result from electricity shares from nuclear energy including in PVC production.

Components for reuse(CRU)
Nothing accrues.

Materials for recycling (MFR)
Materials for recycling are provided above all by waste treatment (Module C3), maintenance and to a lesser extent by recycling production waste. This is glass, metal and PVC.

Materials for energy recovery (MER)
Nothing accrues.

Exported energy (EEE, EET)
Energy in the form of electricity (EEE) and heat (EET) is recovered especially from waste treatment and exported, and here above all by incinerating PVC waste.

6.3.4 Additional impact categories

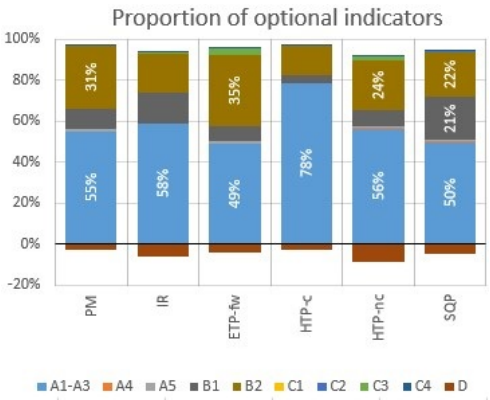

Fig. 6-5: Additional impact categories in accordance with EN 15804+A2

The distribution of further indicators to be stated optionally in individual modules of the lifecycle in accordance with *EN 15804+A2* can be seen in Fig. 6-5. There is no discussion.

7. Requisite evidence

7.1 Fire behaviour

Fire tests in accordance with *EN 13823* on several samples from various manufacturers by Efectis Nederland BV, project number 2012-Efectis-R0205

Results:
In accordance with the average parameters determined, plastic windows fulfil the classification criteria in accordance with *DIN EN 13501-1*: 2007+A1:2009 as follows:
Fire behaviour class: B–E
Smoke production: s3
Flaming droplets: d0

7.2 VOC emissions

7.2.1
Final Report VOC Emission Study 'Plastic Windows'
Institut für Holztechnologie Dresden gemeinnützige GmbH (IHD). NO 1516009. July 2017

The results of several examinations of indoor pollution with VOC emissions are summarised in the report.

Results:
With regard to the French *Décret n° 2011-321* VOC ordinance for building products, all window elements examined fulfilled the best possible class A+ according to *Arrêté etiquetage 2011*.
With regard to the *AgBB* German assessment schema, all PVC frame profile variants examined (white, coated, foil-covered) fulfil the requirements.

7.2.2
Research project on VOC emissions in building components
The Federal Office for Building and Regional Planning (BBR) as part of the research initiative on the future of building (Bundesamt für Bauwesen und Raumordnung im Rahmen der Forschungsinitiative Zukunft Bau), file ref. Z6-10.08.18.7-08.20/II2-F20-08-005; December 2010

Results: With regard to indoor pollution, the requirements of the assessment by the *AgBB* schema are undercut.

8. References

STANDARDS

DIN 4102-1
DIN 4102-1:1998-05, Fire behaviour of building materials and building components – Part 1: Building materials; concepts, requirements and tests.

DIN V 18599-2
DIN V 18599-2:2011-12, Energy efficiency of buildings – Calculation of the net, final and primary energy demand for heating, cooling, ventilation, domestic hot water and lighting – Part 2: Net energy demand for heating and cooling of building zones.

EN 13501-1
DIN EN 13501-1:2019-05, Fire classification of construction products and building elements – Part 1: Classification using data from reaction to fire tests.

EN 13823
DIN EN 13823:2020-09, Reaction to fire tests for building products – Building products excluding floorings exposed to the thermal attack by a single burning item.

EN 14351-1
DIN EN 14351-1:2016-12, Windows and doors – Product standard, performance characteristics – Part 1: Windows and external pedestrian doorsets.

EN 15804
DIN EN 15804:2020-03,Sustainability of construction works – Environmental product declarations – Core rules for the product category of construction products. German version EN 15804:2012+A2:2019

EN 17213
DIN EN 17213:2020-09, Windows and doors – Environmental Product Declarations – Product category rules for windows and pedestrian doorsets.

ISO 14001
DIN EN ISO 14001:2015-11, Environmental management systems – Requirements with guidance for use.

ISO 14025
DIN EN ISO 14025:2011-10, Environmental labels and declarations – Type III environmental declarations – Principles and procedures.

ISO 50001
DIN EN ISO 50001:2018-12: Energy management systems – Requirements with guidance for use

FURTHER REFERENCES

AgBB
Evaluation scheme of emissions of Volatile Organic Compounds from building products; Committee for the Health-related Evaluation of Builduing Products; Germany, June 2021.

Arrêté etiquetage 2011
Arrêté du 19 avril 2011 relatif à l'étiquetage des produits de construction ou de revêtement de mur ou de sol et des peintures et vernis sur leurs émissions de polluants volatils.(JORF n°0111 du 13 mai 2011. Texte n° 15).
This decree specifies the details of the VOC regulation Décret n° 2011-321 including the limit values of the classes and the type of labeling.

BBSR 2017
Federal Institute for Construction,Urban and Regional Research, 24.02.2017, Useful lives of building components for life-cycle analysis according to BNB.

Construction Products Regulation (CPR)
Regulation (EU) No 305/2011 of the European Parliament and of the Council of 9 March 2011 laying down harmonised conditions for the marketing of construction products and repealing Council Directive 89/106/EEC (OJ L 88, 4.4.2011, p. 5–43).

Décret n° 2011-321
Décret n° 2011-321 du 23 mars 2011 relatif à l'étiquetage des produits de construction ou de revêtement de mur ou de sol et des peintures et vernis sur leurs émissions de polluants volatils (JORF n°0071 du 25 mars 2011. Texte n° 16).
French regulation on the labeling of construction products with regard to their emissions of volatile pollutants (VOC emissions).

ECHA candidate list
Candidate List of substances of very high concern for Authorisation (published in accordance with Article 59(10) of the REACH Regulation), 01.04.2020. Helsinki: European Chemicals Agency (ECHA).

ecoinvent 3
ecoinvent 3.7. Version 3.7.1, 2020. Dübendorf (CH): Swiss Centre for Life Cycle Inventories.

European Waste Catalogue
European Waste Catalogue (EWC) (Commission Decision 94/3/EC).

Gabi
GaBi ts, Version 10.5, 2021. Software-System and Database. Leinfelden-Echterdingen: Sphera Solutions GmbH.

IBU 2021/1
Institut Bauen und Umwelt e.V., 2021:General Instructions for the EPD programme of Institut Bauen und Umwelt e.V., Version 2.0, Berlin: Institut Bauen und Umwelt e.V.

IBU 2021/2
Institut Bauen und Umwelt e.V., 2021: Product Category Rules for Building-Related Products and Services. Institut Bauen und Umwelt e.V. (IBU) Part A: Calculation Rules for the Life Cycle Assessment and Requirements on the Project Report acc. to EN 15804+A2:2019. Version 1.1. Berlin: Institut Bauen und Umwelt e.V.

IBU 2021/3
Institut Bauen und Umwelt e.V., 2021: PCR Guidance-Texts for Building-Related Products an Services. From the range of Environmental Product Declarations of Institute Construction and Envirmonment e.V. (IBU) Part B: Requirements on the EPD for Windows and Doors. Version 1.4. Berlin: Institut Bauen und Umwelt e.V.

ift 2010
ift Rosenheim 2010: Research project on VOC emissions in building components. Sponsered by The Federal Office for Building and Regional Planning (BBR) as part of the research initiative on the future of building (Bundesamt für Bauwesen und Raumordnung im Rahmen der Forschungsinitiative Zukunft Bau), file ref. Z6-10.08.18.7-08.20/II2-F20-08-005; Rosenheim: ift Rosenheim, Hochschule Rosenheim.

RAL-GZ 695
RAL Deutsches Institut für Gütesicherung und Kennzeichnung e.V. 2016: Windows, facades and front doors - Quality certification (RAL-GZ 695). Bonn: RAL Deutsches Institut für Gütesicherung und Kennzeichnung e.V.

RAL-GZ 716
RAL Deutsches Institut für Gütesicherung und Kennzeichnung e.V., 2019: Plastic window profile systems - Quality certification (RAL-GZ 716). Bonn: RAL Deutsches Institut für Gütesicherung und Kennzeichnung e.V.

AMBIANCE UPVC EPD

Publisher
Institut Bauen und Umwelt e.V.
Hegelplatz 1
10117 Berlin
Germany

Tel +49 (0)30 3087748- 0
Fax +49 (0)30 3087748- 29
Mail info@ibu-epd.com
Web **www.ibu-epd.com**

Programme holder
Institut Bauen und Umwelt e.V.
Hegelplatz 1
10117 Berlin
Germany

Tel +49 (0)30 - 3087748- 0
Fax +49 (0)30 – 3087748 - 29
Mail info@ibu-epd.com
Web **www.ibu-epd.com**

Author of the Life Cycle Assessment
SKZ - Das Kunststoff-Zentrum
Friedrich-Bergius-Ring 22
97076 Würzburg
Germany

Tel +49 931 4104-433
Fax +49 931 4104-707
Mail kfe@skz.de
Web **www.skz.de**

Owner of the Declaration
GKFP - Gütegemeinschaft Kunststoff-Fensterprofilsysteme e.V.
Am Hofgarten 1-2
53113 Bonn
Germany

Tel +49 228 766 76 54
Fax +49 228 766 76 50
Mail info@gkfp.de
Web **gkfp.de**

EPPA - European PVC Profiles and related Building Products Association
Avenue de Cortenbergh 71
1000 Brüssel
Belgium

Tel +32 27 39 63 81
Fax +32 27 32 42 18
Mail info@eppa-profiles.eu
Web **eppa-profiles.eu**

QKE - Qualitätsverband Kunststofferzeugnisse e.V.
Am Hofgarten 1-2
53113 Bonn
Germany

Tel +49 (0)228 7667654
Fax +49 (0)228 7667650
Mail info@qke-bonn.de
Web **qke-bonn.de**

HARDWARE CORROSION RESISTANCE

DEUTSCHE NORM

June 2007

DIN EN 1670

DIN

ICS 91.190

Supersedes
DIN EN 1670:1998-12

Building hardware –
Corrosion resistance –
Requirements and test methods
English version of DIN EN 1670:2007-06

Schlösser und Baubeschläge –
Korrosionsbeständigkeit –
Anforderungen und Prüfverfahren
Englische Fassung DIN EN 1670:2007-06

Document comprises 12 pages

© No part of this standard may be reproduced without prior permission of
DIN Deutsches Institut für Normung e. V., Berlin. Beuth Verlag GmbH, 10772 Berlin, Germany,
has the exclusive right of sale for German Standards (DIN-Normen).

English price group 7
www.din.de
beuth.de

09.07 9862962

Provided by IHS
No reproduction or networking permitted without license from IHS
Licensee=Bogazici University/5964815002, User=logix, logic
Not for Resale, 08/20/2014 03:55:07 MDT

DIN EN 1670:2007-06

National foreword

This standard has been prepared by CEN/TC 33 “Doors, windows, shutters, building hardware and curtain walling” (Secretariat: AFNOR, France), Working Group WG 4 “Building hardware” (lead-management: United Kingdom).

The responsible German body involved in its preparation was the *Normenausschuss Bauwesen* (Building and Civil Engineering Standards Committee), Technical Committee NA 005-09-42 AA *Korrosionsschutz.*

Amendments

This standard differs from DIN EN 1670:1998-12 as follows:

a) The corrosion resistance classification system has been extended from 4 to 5 grades.

b) New developments in technology for corrosion resistance have been taken into account.

c) The former Annex B has been revised and is now included as Annex A.

d) The bibliography has been updated and extended.

Previous editions

DIN EN 1670: 1998-12

Provided by IHS
No reproduction or networking permitted without license from IHS

Licensee=Bogazici University/5964815002, User=logix, logic
Not for Resale, 08/20/2014 03:55:07 MDT

EUROPEAN STANDARD
NORME EUROPÉENNE
EUROPÄISCHE NORM

EN 1670

March 2007

ICS 91.190

Supersedes EN 1670:1998

English Version

Building hardware - Corrosion resistance - Requirements and test methods

Quincaillerie pour le bâtiment - Résistance à la corrosion - Exigences et méthodes d'essai

Schlösser und Baubeschläge - Korrosionsbeständigkeit - Anforderungen und Prüfverfahren

This European Standard was approved by CEN on 12 February 2007.

CEN members are bound to comply with the CEN/CENELEC Internal Regulations which stipulate the conditions for giving this European Standard the status of a national standard without any alteration. Up-to-date lists and bibliographical references concerning such national standards may be obtained on application to the CEN Management Centre or to any CEN member.

This European Standard exists in three official versions (English, French, German). A version in any other language made by translation under the responsibility of a CEN member into its own language and notified to the CEN Management Centre has the same status as the official versions.

CEN members are the national standards bodies of Austria, Belgium, Bulgaria, Cyprus, Czech Republic, Denmark, Estonia, Finland, France, Germany, Greece, Hungary, Iceland, Ireland, Italy, Latvia, Lithuania, Luxembourg, Malta, Netherlands, Norway, Poland, Portugal, Romania, Slovakia, Slovenia, Spain, Sweden, Switzerland and United Kingdom.

EUROPEAN COMMITTEE FOR STANDARDIZATION
COMITÉ EUROPÉEN DE NORMALISATION
EUROPÄISCHES KOMITEE FÜR NORMUNG

Management Centre: rue de Stassart, 36 B-1050 Brussels

© 2007 CEN All rights of exploitation in any form and by any means reserved worldwide for CEN national Members.

Ref. No. EN 1670:2007: E

Provided by IHS
No reproduction or networking permitted without license from IHS

Licensee=Bogazici University/5964815002, User=logix, logic
Not for Resale, 08/20/2014 03:55:07 MDT

EN 1670:2007 (E)

Contents

Page

Foreword 3

Introduction 4

1 Scope 5

2 Normative references 5

3 Terms and definitions 6

4 Classification 6

5 Requirements 6
5.1 General 6
5.2 General test requirements 6
5.3 Functional acceptance condition 7
5.4 Appearance acceptance condition 7
5.4.1 General 7
5.4.2 Degree of rust 7
5.4.3 Degree of blistering 7

6 Test conditions 7
6.1 General conditions 7
6.2 Treatment following the corrosion test 8

7 Marking 8

Annex A (informative) **Examples of service conditions for which the various grades of corrosion resistance are appropriate** 9

Bibliography 10

Provided by IHS
No reproduction or networking permitted without license from IHS

Licensee=Bogazici University/5964815002, User=logix, logic
Not for Resale, 08/20/2014 03:55:07 MDT

Foreword

This document (EN 1670:2007) has been prepared by Technical Committee CEN/TC 33 “Doors, windows, shutters, building hardware and curtain walling”, the secretariat of which is held by AFNOR.

This European Standard shall be given the status of a national standard, either by publication of an identical text or by endorsement, at the latest by September 2007, and conflicting national standards shall be withdrawn at the latest by September 2007.

This document supersedes EN 1670:1998.

CEN/TC 33 have considered previous comments by CEN/TC 262, thereby replacing this European Standard with a new one based solely on the performance testing of building hardware.

The current version has been revised to incorporate clarification of the scope, definitions, requirements and acceptance criteria throughout Annexes A and B.

The current version has also been revised to incorporate new developments in technology for corrosion resistance. The new technology combines specific layers and methods on the surface so that thickness or type of layer are no longer relevant.

This European Standard is one of a series of European Standards dedicated to building hardware products.

According to the CEN/CENELEC Internal Regulations, the national standards organizations of the following countries are bound to implement this European Standard: Austria, Belgium, Bulgaria, Cyprus, Czech Republic, Denmark, Estonia, Finland, France, Germany, Greece, Hungary, Iceland, Ireland, Italy, Latvia, Lithuania, Luxembourg, Malta, Netherlands, Norway, Poland, Portugal, Romania, Slovakia, Slovenia, Spain, Sweden, Switzerland and United Kingdom.

Provided by IHS
No reproduction or networking permitted without license from IHS

Licensee=Bogazici University/5964815002, User=logix, logic
Not for Resale, 08/20/2014 03:55:07 MDT

EN 1670:2007 (E)

Introduction

Corrosion protection alone is not specified in any of the six essential requirements of the Construction Products Directive but is an implicit requirement for durability. This European Standard provides for the corrosion resistance of all building hardware, classified according to application.

Wherever reference is made to classes they are considered to be technical classes and not classes according to Article 3(2) of the Construction Products Directive (89/106/EEC).

The performance tests incorporated in this European Standard are considered to be reproducible and as such will provide a consistent and objective assessment of the performance of these products throughout CEN Member States.

A full contribution to the preparation of this European Standard has been made by the European manufacturers' organisation "ARGE".

NOTE This European Standard does not include testing for corrosion by sulfur dioxide which is covered by EN ISO 6988.

Provided by IHS
No reproduction or networking permitted without license from IHS

Licensee=Bogazici University/5964815002, User=logix, logic
Not for Resale, 08/20/2014 03:55:07 MDT

1 Scope

This European Standard specifies the requirements for the corrosion resistance of building hardware for doors, windows, shutters and curtain walling.

This European Standard provides a method of classification of corrosion resistance of building hardware based on performance in a neutral salt spray test (EN ISO 9227).

This European Standard specifies requirements for both coated and uncoated surfaces and five grades of corrosion resistance being laid down in accordance with the different conditions of use grades 1 to 5. A grade 0 is also included for which no requirements have been specified. Requirements for levels of corrosion resistance which are higher than those laid down for grade 5 have not been included in this European Standard and are subject to agreement where required.

This European Standard also applies to the metal fasteners required for fixing building hardware if specified.

Screws and fastenings which are sold with a hardware product which conforms to this European Standard should also conform to this European Standard.

NOTE 1 The term "grade" used in this European Standard corresponds to the term "class" which is used in ISO standards.

NOTE 2 There is seldom a direct relationship between resistance to the action of salt spray and resistance to corrosion in other media, because several factors influencing the progress of corrosion, such as the formation of protective films, vary greatly with the conditions encountered. Therefore, the test results should not be regarded as a direct guide to the corrosion resistance of the tested materials in all environments where these materials may be used. Also, the performance of different materials during the test should not be taken as a direct guide to the corrosion resistance of these materials in service.

The method described in this European Standard gives a means of checking that the comparative quality of a material, with or without corrosion protection, is maintained.

In addition, for quality control purposes, comparison can be made between specimens coated with the same coating. As comparative tests, however, salt spray tests are only suitable if the coatings are sufficiently similar in nature.

It is often not possible to use results gained from salt spray testing as a comparative guide to the long-term behaviour of different coating systems as the corrosion stress during these tests differs significantly from the corrosion stresses encountered in practice.

2 Normative references

The following referenced documents are indispensable for the application of this document. For dated references, only the edition cited applies. For undated references, the latest edition of the referenced document (including any amendments) applies.

EN ISO 4628-2, *Paints and varnishes — Evaluation of degradation of coatings — Designation of quantity and size of defects, and of intensity of uniform changes in appearance — Part 2: Assessment of degree of blistering (ISO 4628-2:2003)*

EN ISO 9227, *Corrosion tests in artificial atmospheres — Salt spray tests (ISO 9227:2006)*

Provided by IHS
No reproduction or networking permitted without license from IHS

Licensee=Bogazici University/5964815002, User=logix, logic
Not for Resale, 08/20/2014 03:55:07 MDT

EN 1670:2007 (E)

3 Terms and definitions

For the purposes of this document, the following terms and definitions apply.

3.1
building hardware products
products made with different kinds of material and components, where each type of material has its own specification (regarding corrosion resistance)

NOTE Often a finished product consists of an assembly of components where one or more components can be made with a specific material.

3.2
significant surface
parts of the surface of a product that are visible or exposed when the product is installed and can be touched by a ball 20 mm $^{+1}_{0}$ mm in diameter and those other surfaces on which a specified corrosion resistance is essential to ensure the continuance of correct function

4 Classification

Corrosion resistance of building hardware products shall be classified according to the following grading system:

grade 0	no defined corrosion resistance;
grade 1	low corrosion resistance;
grade 2	moderate corrosion resistance;
grade 3	high corrosion resistance;
grade 4	very high corrosion resistance;
grade 5	exceptionally high corrosion resistance.

See Annex A for the meaning of this classification and its application to particular service conditions.

NOTE Grade 0 is applicable to products for which a defined corrosion resistance is not required.

5 Requirements

5.1 General

The following requirements shall not apply to grade 0 finishes for which no defined corrosion resistance is relevant.

5.2 General test requirements

The product standard shall provide the method to specify the requirements for corrosion resistance including the acceptance criteria for appearance and functionality as required in 5.3 and 5.4.

Where no product standards exist, the manufacturer may declare compliance with this European Standard for functionality and/or appearance.

Provided by IHS
No reproduction or networking permitted without license from IHS

Licensee=Bogazici University/5964815002, User=logix, logic
Not for Resale, 08/20/2014 03:55:07 MDT

Some product standards may need to distinguish specific requirements for appearance and function. The specific requirements will be made known in the appropriate product standard.

It shall also be stated whether such tests are to be carried out on samples which have previously been subjected to other test procedures or are to be subjected to other test procedures afterwards, or whether the corrosion tests are to be performed on fresh samples.

The products shall be exposed to a neutral salt spray test in accordance with EN ISO 9227, the grades for corrosion resistance being given below.

— grade 1: 24 h $^{+1}_{-0}$ h;

— grade 2: 48 h $^{+1}_{-0}$ h;

— grade 3: 96 h $^{+1}_{-0}$ h;

— grade 4: 240 h $^{+1}_{-0}$ h;

— grade 5: 480 h $^{+1}_{-0}$ h.

5.3 Functional acceptance condition

After the corrosion test, the product shall be capable of functioning normally as required by the relevant product standard if available.

5.4 Appearance acceptance condition

5.4.1 General

Surfaces shall show no sign of tarnish, visible to unaided normal or corrected vision as blackening or adverse discolouration of the surface – this does not include an acceptable patina.

NOTE Corrosion of the base metal substrate should not be confused with surface corrosion of its finish. In the case of steel substrates, corrosion is rust of a reddish brown appearance. Corrosion of aluminium or zinc alloy substances is white and corrosion of brass or bronze substrates is green.

5.4.2 Degree of rust

Surfaces shall withstand exposure for the time specified without corrosion of the base metal substrate visible to unaided normal or corrected vision excepting an average of one spot per 650 mm^2 of significant surface and without any spots larger than 1,5 mm in any direction.

5.4.3 Degree of blistering

The degree of blistering of surfaces shall not be greater than density 2 and the size of any blisters shall not exceed size 3 as both designated in EN ISO 4628-2.

6 Test conditions

6.1 General conditions

a) Any corrosion tests required shall be carried out on products assembled or in the models as normally supplied.

Provided by IHS
No reproduction or networking permitted without license from IHS

Licensee=Bogazici University/5964815002, User=logix, logic
Not for Resale, 08/20/2014 03:55:07 MDT

b) When the specimen is under test, the product shall be placed in the test cabinet in its normal orientation in use. If a normal orientation cannot be defined, the specimen shall be placed as specified in EN ISO 9227. If this is not possible because of the size or shape of the specimen, it shall be placed so as to minimize the disruption of flow of the atmosphere within the test cabinet.

6.2 Treatment following the corrosion test

If there are no instructions in a relevant product standard, follow the process defined in EN ISO 9227.

7 Marking

The corrosion resistance of building hardware is normally designated within the marking for that specific building hardware. Where no hardware standard is available, the product shall be marked by specifying the number of this European Standard followed by the grade achieved.

EXAMPLE EN 1670: grade 1.

The marking shall be quoted in the literature relevant to the hardware or on its labelling or packaging, or by marking the product itself, or optionally by more than one of these methods.

Provided by IHS
No reproduction or networking permitted without license from IHS

Licensee=Bogazici University/5964815002, User=logix, logic
Not for Resale, 08/20/2014 03:55:07 MDT

Annex A
(informative)

Examples of service conditions for which the various grades of corrosion resistance are appropriate

Corrosion resistance	Service conditions
Grade 0 : no defined corrosion resistance	No specific service conditions service conditions where a defined corrosion resistance is not relevant
Grade 1 : low corrosion resistance	Service indoors in warm dry atmospheres
Grade 2 : moderate corrosion resistance	Service indoors where condensation may occur
Grade 3 : high corrosion resistance	Service outdoors where occasional or frequent wetting by rain or dew may occur
Grade 4 : very high corrosion resistance	Service outdoors in very severe conditions
Grade 5 : exceptionally high corrosion resistance	Service outdoors in exceptionally severe conditions where long-term protection of the product is required

Provided by IHS
No reproduction or networking permitted without license from IHS

Licensee=Bogazici University/5964815002, User=logix, logic
Not for Resale, 08/20/2014 03:55:07 MDT

Bibliography

[1] ISO 1456:2003, *Metallic coatings — Electrodeposited coatings of nickel plus chromium and of copper plus nickel plus chromium*

[2] ISO 1458:2002, *Metallic coatings — Electrodeposited coatings of nickel*

[3] ISO 2081:1986, *Metallic coatings — Electroplated coatings of zinc on iron or steel*

[4] ISO 4520:1981, *Chromate conversion coatings on electroplated zinc and cadmium coatings*

[5] ISO 4525:2003, *Metallic coatings — Electroplated coatings of nickel plus chromium on plastics materials*

[6] EN ISO 4541:1994, *Metallic and other non-organic coatings — Corrodkote corrosion test (CORR test) (ISO 4541:1978)*

[7] EN ISO 4628-3:2003, *Paints and varnishes — Evaluation of degradation of coatings — Designation of quantity and size of defects, and of intensity of uniform changes in appearance — Part 3: Assessment of degree of rusting (ISO 4628-3:2003)*

[8] EN ISO 6988:1994, *Metallic and other non organic coatings — Sulfur dioxide test with general condensation of moisture (ISO 6988:1985)*

[9] ISO 7599:1983, *Anodizing of aluminium and its alloys — General specifications for anodic oxide coatings on aluminium*

[10] EN ISO 8565:1995, *Metals and alloys — Atmospheric corrosion testing — General requirements for field tests (ISO 8565:1992)*

[11] EN ISO 10289:2001, *Methods for corrosion testing of metallic and other inorganic coatings on metallic substrates — Rating of test specimens and manufactured articles subjected to corrosion tests (ISO 10289:1999)*

[12] EN ISO 10683:2000, *Fasteners — Non-electrolytically applied zinc flake coatings (ISO 10683:2000)*

[13] EN 12329:2000, *Corrosion protection of metals — Electrodeposited coatings of zinc with supplementary treatment on iron or steel*

[14] EN 12540:2000, *Corrosion protection of metals — Electrodeposited coatings of nickel, nickel plus chromium, copper plus nickel and copper plus nickel plus chromium*

[15] DIN 50021:1988, *Sprühnebelprüfungen mit verschiedenen Natriumchlorid-Lösungen (Spray tests with different sodium chloride solutions)*

[16] DIN 50961:2000, *Galvanische Überzüge — Zinküberzüge auf Eisenwerkstoffen — Begriffe, Korrosionsprüfung und Korrosionsbeständigkeit (Electroplated coatings — Zinc coatings on iron and steel — Terms testing and corrosion resistance)*

[17] EN ISO 12944-2:1998, *Paints and varnishes – Corrosion protection of steel structures by protective paint systems – Part 2: Classification of environments (ISO 12944-2:1998)*

Provided by IHS
No reproduction or networking permitted without license from IHS

Licensee=Bogazici University/5964815002, User=logix, logic
Not for Resale, 08/20/2014 03:55:07 MDT

14x341 Mullion

- Spans are the maximum calculated allowable, based on the revised NZS 4211, which requires that the member deflection at serviceability wind press (SWP) should not exceed 1/200 of the span.
- All spans have been calculated to indicate performance in each wind zone. Current NZS 4211 compliance should be checked against the latest aluplast reports and size limits imposed by NZS 4211, Section 5.2.2, should not be exceeded.
- Any custom calculations can be performed as required on request.

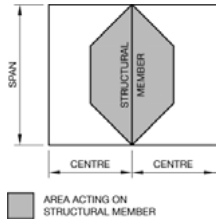

	Spans for each wind zone				
Centers	Low	Medium	High	Very High	Extra High
	510pa	680pa	970pa	1250pa	1515pa
600	2110	1920	1710	1580	1480
700	2005	1840	1635	1515	1425
800	1935	1770	1580	1450	1385
900	1880	1710	1545	1420	1360
1000	1815	1680	1520	1400	1330
1100	1795	1660	1475	1385	1300
1200	1775	1615	1465	1385	1295
1300	1730	1605	1465	1365	1295
1400	1725	1605	1465	1355	1230
1500	1725	1575	1440	1285	1170
1600	1695	1575	1365	1220	1120
1700	1695	1510	1305	1170	1080
1800	1630	1440	1250	1130	1055

14×341 with 229101

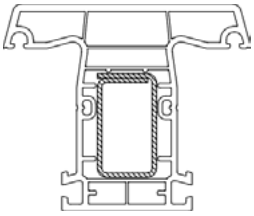

	Spans for each wind zone				
Centers	Low	Medium	High	Very High	Extra High
	510pa	680pa	970pa	1250pa	1515pa
600	2345	2130	1895	1740	1645
700	2230	2025	1815	1670	1565
800	2150	1955	1755	1615	1515
900	2070	1900	1690	1580	1480
1000	2020	1835	1660	1535	1460
1100	1995	1810	1640	1505	1445
1200	1935	1795	1600	1495	1410
1300	1920	1745	1585	1495	1405
1400	1875	1740	1585	1470	1405
1500	1875	1740	1575	1470	1340
1600	1875	1710	1565	1395	1275
1700	1845	1710	1490	1330	1220
1800	1845	1645	1420	1280	1200

14×341 with 229098

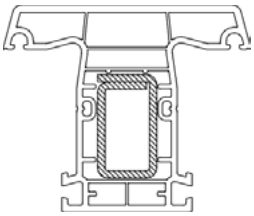

	Spans for each wind zone				
Centers	Low	Medium	High	Very High	Extra High
	510pa	680pa	970pa	1250pa	1515pa
600	2610	2385	2115	1945	1825
700	2490	2265	2010	1865	1750
800	2385	2185	1940	1785	1690
900	2315	2100	1885	1735	1635
1000	2235	2050	1820	1705	1600
1100	2185	2000	1800	1685	1580
1200	2165	1965	1780	1635	1570
1300	2110	1950	1735	1630	1525
1400	2095	1905	1730	1630	1525
1500	2050	1905	1730	1595	1525
1600	2050	1880	1700	1595	1465
1700	2010	1875	1700	1530	1395
1800	2010	1875	1635	1460	1370

14×341 with 229098 and 259023

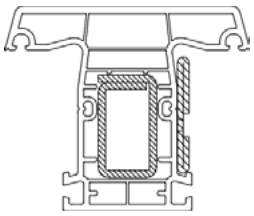

14x345 Mullion

- Spans are the maximum calculated allowable, based on the revised NZS 4211, which requires that the member deflection at serviceability wind press (SWP) should not exceed 1/200 of the span.
- All spans have been calculated to indicate performance in each wind zone. Current NZS 4211 compliance should be checked against the latest aluplast reports and size limits imposed by NZS 4211, Section 5.2.2, should not be exceeded.
- Any custom calculations can be performed as required on request.

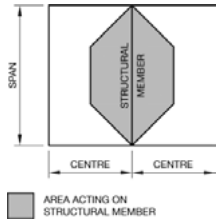

	Spans for each wind zone				
Centers	Low	Medium	High	Very High	Extra High
	510pa	680pa	970pa	1250pa	1515pa
600	2840	2715	2410	2230	2090
700	2840	2595	2305	2120	2000
800	2730	2480	2225	2045	1915
900	2625	2410	2140	1985	1865
1000	2560	2325	2090	1920	1815
1100	2480	2275	2025	1895	1775
1200	2435	2210	2000	1845	1760
1300	2370	2195	1985	1825	1730
1400	2355	2150	1940	1820	1710
1500	2305	2135	1935	1780	1710
1600	2300	2130	1895	1780	1680
1700	2265	2090	1895	1780	1680
1800	2260	2090	1875	1775	1665

14×345 with 249035

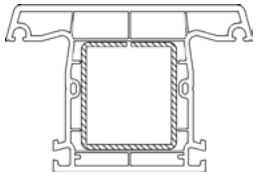

	Spans for each wind zone				
Centers	Low	Medium	High	Very High	Extra High
	510pa	680pa	970pa	1250pa	1515pa
600	2860	2860	2555	2360	2215
700	2860	2750	2440	2245	2105
800	2860	2630	2335	2165	2030
900	2785	2550	2265	2085	1975
1000	2710	2465	2210	2035	1905
1100	2625	2415	2145	2000	1880
1200	2580	2345	2120	1950	1845
1300	2510	2325	2065	1935	1815
1400	2495	2270	2055	1885	1810
1500	2440	2260	2005	1885	1770
1600	2435	2210	2005	1880	1770
1700	2385	2210	1970	1860	1745
1800	2385	2175	1970	1860	1745

14×345 with 249035 and 259023

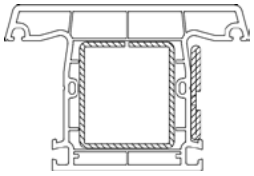

	Spans for each wind zone				
Centers	Low	Medium	High	Very High	Extra High
	510pa	680pa	970pa	1250pa	1515pa
600	2860	2860	2860	2860	2860
700	2860	2860	2860	2860	2815
800	2860	2860	2860	2860	2705
900	2860	2860	2860	2775	2605
1000	2860	2860	2860	2705	2535
1100	2860	2860	2850	2620	2455
1200	2860	2860	2770	2575	2415
1300	2860	2860	2725	2505	2360
1400	2860	2860	2660	2490	2335
1500	2860	2860	2650	2435	2305
1600	2860	2860	2590	2430	2275
1700	2860	2860	2590	2380	2265
1800	2860	2805	2540	2380	2240

14×345 with 249035 and 259926

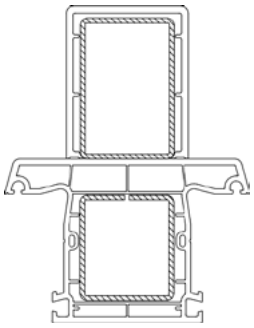

14x341 Mullion with Static Post 12x109

- Spans are the maximum calculated allowable, based on the revised NZS 4211, which requires that the member deflection at serviceability wind press (SWP) should not exceed 1/200 of the span.
- All spans have been calculated to indicate performance in each wind zone. Current NZS 4211 compliance should be checked against the latest aluplast reports and size limits imposed by NZS 4211, Section 5.2.2, should not be exceeded.
- Any custom calculations can be performed as required on request.

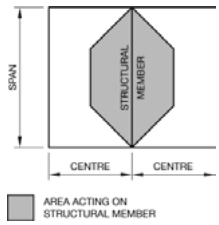

	Spans for each wind zone				
Centers	Low	Medium	High	Very High	Extra High
	510pa	680pa	970pa	1250pa	1515pa
600	2860	2860	2805	2580	2420
700	2860	2860	2680	2465	2310
800	2860	2860	2565	2355	2230
900	2860	2775	2490	2290	2145
1000	2860	2705	2405	2220	2095
1100	2860	2620	2355	2165	2000
1200	2805	2575	2285	2140	2000
1300	2760	2505	2270	2085	1995
1400	2690	2490	2215	2075	1945
1500	2680	2435	2205	2025	1940
1600	2625	2430	2160	2025	1900
1700	2615	2380	2160	2000	1900
1800	2570	2380	2120	2000	1890

12×109 with 229125
14×341 with 229101

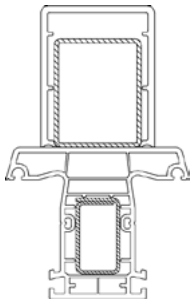

	Spans for each wind zone				
Centers	Low	Medium	High	Very High	Extra High
	510pa	680pa	970pa	1250pa	1515pa
600	2860	2860	2860	2860	2720
700	2860	2860	2860	2770	2600
800	2860	2860	2860	2650	2485
900	2860	2860	2770	2570	2410
1000	2860	2860	2700	2485	2330
1100	2860	2860	2615	2430	2280
1200	2860	2860	2570	2360	2215
1300	2860	2815	2505	2345	2200
1400	2860	2750	2490	2285	2150
1500	2860	2725	2430	2275	2135
1600	2860	2680	2425	2230	2130
1700	2860	2625	2375	2230	2095
1800	2835	2625	2375	2190	2095

12×109 with 229125
14×341 with 229101

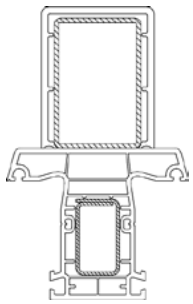

	Spans for each wind zone				
Centers	Low	Medium	High	Very High	Extra High
	510pa	680pa	970pa	1250pa	1515pa
600	2860	2860	2860	2860	2770
700	2860	2860	2860	2805	2645
800	2860	2860	2860	2700	2530
900	2860	2860	2825	2595	2460
1000	2860	2860	2755	2530	2375
1100	2860	2860	2665	2450	2325
1200	2860	2860	2620	2405	2255
1300	2860	2860	2550	2360	2240
1400	2860	2800	2525	2330	2185
1500	2860	2735	2475	2305	2175
1600	2860	2730	2460	2270	2130
1700	2860	2675	2420	2265	2130
1800	2860	2675	2400	2230	2115

12×109 with 259926
14×341 with 229098

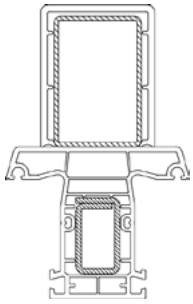

14x341 Mullion and 14x320 Tilt & Turn Sash

- This sheet is only applicable if the profile combination is continuous from head to sill and not applicable if fixed light above or below.
- Spans are the maximum calculated allowable, based on the revised NZS 4211, which requires that the member deflection at serviceability wind press (SWP) should not exceed 1/200 of the span.
- All spans have been calculated to indicate performance in each wind zone. Current NZS 4211 compliance should be checked against the latest aluplast reports and size limits imposed by NZS 4211, Section 5.2.2, should not be exceeded.
- Any custom calculations can be performed as required on request.

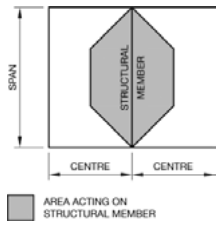

14×341 with 229101
14×320 with 249016

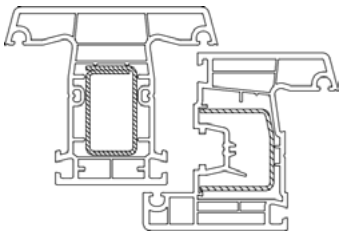

	Spans for each wind zone				
Centers	Low	Medium	High	Very High	Extra High
	510pa	680pa	970pa	1250pa	1515pa
600	2565	2345	2085	1915	1795
700	2450	2225	1995	1835	1720
800	2345	2150	1910	1775	1668
900	2275	2070	1855	1705	1630
1000	2220	2020	1815	1680	1575
1100	2150	1990	1770	1655	1555
1200	2130	1935	1750	1610	1545
1300	2075	1920	1730	1600	1525
1400	2065	1875	1700	1600	1505
1500	2015	1870	1700	1575	1505
1600	2015	1870	1685	1575	1440
1700	2000	1845	1685	1505	1375
1800	1995	1845	1610	1435	1350

14×341 with 229101
14×320 with 259026

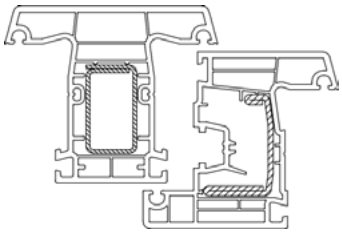

	Spans for each wind zone				
Centers	Low	Medium	High	Very High	Extra High
	510pa	680pa	970pa	1250pa	1515pa
600	2820	2565	2290	2150	1975
700	2695	2450	2175	2000	1895
800	2580	2345	2100	1930	1810
900	2505	2275	2020	1875	1760
1000	2415	2220	1970	1815	1730
1100	2365	2150	1945	1790	1690
1200	2300	2130	1890	1770	1660
1300	2280	2070	1875	1730	1655
1400	2225	2060	1865	1720	1645
1500	2215	2015	1830	1720	1620
1600	2170	2015	1830	1690	1620
1700	2170	2000	1800	1690	1600
1800	2130	1990	1800	1625	1485

14×341 with 229098
14×320 with 259026

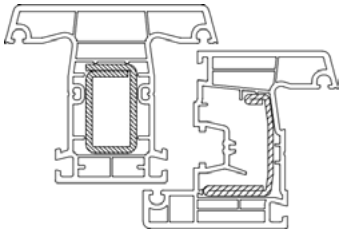

	Spans for each wind zone				
Centers	Low	Medium	High	Very High	Extra High
	510pa	680pa	970pa	1250pa	1515pa
600	2860	2690	2400	2210	2045
700	2810	2570	2280	2095	1985
800	2705	2455	2205	2000	1900
900	2600	2385	2120	1970	1845
1000	2535	2305	2070	1900	1815
1100	2455	2255	2005	1875	1760
1200	2410	2190	1985	1835	1740
1300	2360	2175	1970	1785	1730
1400	2335	2135	1920	1780	1690
1500	2305	2110	1920	1760	1690
1600	2275	2110	1880	1760	1680
1700	2265	2070	1880	1760	1680
1800	2235	2065	1880	1755	1600

14x341 Mullion and 14x320 Tilt & Turn Sash

- This sheet is only applicable if the profile combination is continuous from head to sill and not applicable if fixed light above or below.
- Spans are the maximum calculated allowable, based on the revised NZS 4211, which requires that the member deflection at serviceability wind press (SWP) should not exceed 1/200 of the span.
- All spans have been calculated to indicate performance in each wind zone. Current NZS 4211 compliance should be checked against the latest aluplast reports and size limits imposed by NZS 4211, Section 5.2.2, should not be exceeded.
- Any custom calculations can be performed as required on request.

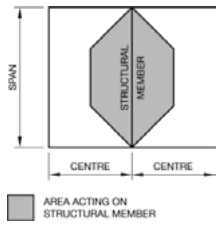

14×341 with 229100

	Spans for each wind zone				
Centers	Low	Medium	High	Very High	Extra High
	510pa	680pa	970pa	1250pa	1515pa
600	1935	1760	1575	1450	1360
700					
800					
900					
1000	1695	1540	1395	1310	1230
1100					
1200					
1300					
1400	1625	1475	1310	1205	1100
1500					
1600					
1700					
1800	1455	1290	1125	1035	950

14×341 with 229100
14×320 with 249016

	Spans for each wind zone				
Centers	Low	Medium	High	Very High	Extra High
	510pa	680pa	970pa	1250pa	1515pa
600	2455	2240	1990	1830	1715
700					
800					
900					
1000	2125	1930	1745	1605	1535
1100					
1200					
1300					
1400	1970	1830	1645	1535	1470
1500					
1600					
1700					
1800	1905	1785	1535	1375	1260

14×341 with 229100
14×320 with 259026

	Spans for each wind zone				
Centers	Low	Medium	High	Very High	Extra High
	510pa	680pa	970pa	1250pa	1515pa
600	2730	2480	2215	2035	1910
700					
800					
900					
1000	2340	2145	1905	1785	1675
1100					
1200					
1300					
1400	2155	1995	1810	1665	1605
1500					
1600					
1700					
1800	2115	1925	1765	1570	1435

14x345 Mullion and 14x320 Tilt & Turn Sash

- This sheet is only applicable if the profile combination is continuous from head to sill and not applicable if fixed light above or below.
- Spans are the maximum calculated allowable, based on the revised NZS 4211, which requires that the member deflection at serviceability wind press (SWP) should not exceed 1/200 of the span.
- All spans have been calculated to indicate performance in each wind zone. Current NZS 4211 compliance should be checked against the latest aluplast reports and size limits imposed by NZS 4211, Section 5.2.2, should not be exceeded.
- Any custom calculations can be performed as required on request.

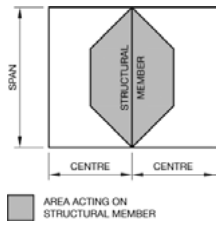

14×345 with 249035
14×320 with 249016

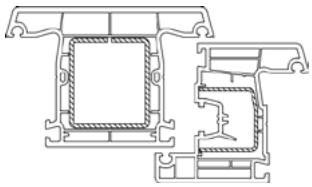

	Spans for each wind zone				
Centers	Low	Medium	High	Very High	Extra High
	510pa	680pa	970pa	1250pa	1515pa
600	2860	2860	2625	2410	2215
700	2860	2805	2505	2305	2160
800	2860	2700	2400	2225	2085
900	2855	2595	2325	2140	2005
1000	2785	2545	2245	2085	1955
1100	2695	2450	2200	2020	1930
1200	2650	2405	2180	2000	1875
1300	2580	2360	2120	1985	1860
1400	2545	2330	2110	1935	1860
1500	2505	2305	2060	1935	1815
1600	2460	2270	2060	1895	1815
1700	2450	2265	2020	1895	1790
1800	2405	2230	2020	1890	1790

14×345 with 249035
14×320 with 259026

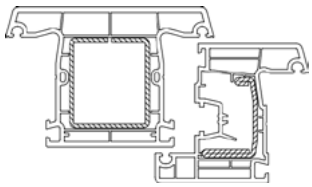

	Spans for each wind zone				
Centers	Low	Medium	High	Very High	Extra High
	510pa	680pa	970pa	1250pa	1515pa
600	2860	2860	2760	2535	2390
700	2860	2860	2635	2420	2270
800	2860	2840	2520	2315	2195
900	2860	2730	2445	2250	2110
1000	2860	2660	2360	2195	2060
1100	2835	2575	2315	2125	2000
1200	2755	2530	2245	2105	1975
1300	2710	2465	2230	2050	1960
1400	2645	2460	2175	2035	1910
1500	2635	2395	2165	2000	1910
1600	2580	2385	2130	1990	1880
1700	2575	2340	2125	1990	1880
1800	2525	2340	2115	1970	1880

12×109 with 259926
14×345 with 249035
14×320 with 259026

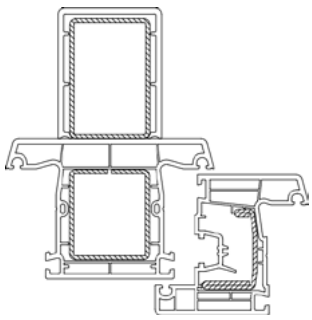

	Spans for each wind zone				
Centers	Low	Medium	High	Very High	Extra High
	510pa	680pa	970pa	1250pa	1515pa
600	2860	2860	2860	2860	2860
700	2860	2860	2860	2860	2860
800	2860	2860	2860	2860	2855
900	2860	2860	2860	2860	2745
1000	2860	2860	2860	2850	2675
1100	2860	2860	2860	2760	2590
1200	2860	2860	2860	2685	2545
1300	2860	2860	2860	2640	2475
1400	2860	2860	2805	2575	2460
1500	2860	2860	2740	2565	2405
1600	2860	2860	2730	2510	2400
1700	2860	2860	2680	2505	2350
1800	2860	2860	2680	2460	2350

14x341 Mullion and 14x320 Tilt & Turn Sash with 12x109 Static Post

- This sheet is only applicable if the profile combination is continuous from head to sill and not applicable if fixed light above or below.
- Spans are the maximum calculated allowable, based on the revised NZS 4211, which requires that the member deflection at serviceability wind press (SWP) should not exceed 1/200 of the span.
- All spans have been calculated to indicate performance in each wind zone. Current NZS 4211 compliance should be checked against the latest aluplast reports and size limits imposed by NZS 4211, Section 5.2.2, should not be exceeded.
- Any custom calculations can be performed as required on request.

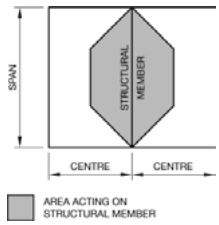

	Spans for each wind zone				
Centers	Low	Medium	High	Very High	Extra High
	510pa	680pa	970pa	1250pa	1515pa
600	2860	2860	2860	2725	2555
700	2860	2860	2820	2605	2445
800	2860	2860	2725	2490	2335
900	2860	2860	2610	2420	2270
1000	2860	2855	2570	2335	2215
1100	2860	2770	2460	2285	2145
1200	2860	2690	2420	2220	2125
1300	2860	2650	2360	2205	2065
1400	2845	2585	2340	2150	2055
1500	2780	2575	2305	2140	2010
1600	2775	2520	2285	2130	2010
1700	2720	2515	2265	2100	2000
1800	2720	2470	2240	2100	1985

12×109 with 229125
14×341 with 229101
14×320 with 249016

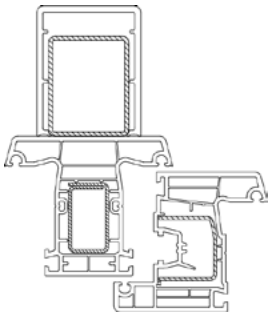

	Spans for each wind zone				
Centers	Low	Medium	High	Very High	Extra High
	510pa	680pa	970pa	1250pa	1515pa
600	2860	2860	2860	2860	2705
700	2860	2860	2860	2755	2585
800	2860	2860	2860	2635	2495
900	2860	2860	2755	2555	2420
1000	2860	2860	2685	2470	2315
1100	2860	2860	2605	2420	2270
1200	2860	2845	2555	2350	2205
1300	2860	2800	2490	2330	2185
1400	2860	2760	2475	2275	2150
1500	2860	2720	2420	2265	2125
1600	2860	2665	2410	2215	2125
1700	2860	2615	2365	2210	2080
1800	2820	2610	2365	2180	2080

12×109 with 229125
14×341 with 229098
14×320 with 259026

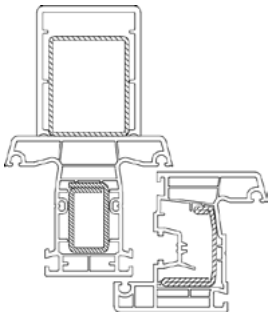

	Spans for each wind zone				
Centers	Low	Medium	High	Very High	Extra High
	510pa	680pa	970pa	1250pa	1515pa
600	2860	2860	2860	2860	2860
700	2860	2860	2860	2860	2805
800	2860	2860	2860	2860	2700
900	2860	2860	2860	2765	2595
1000	2860	2860	2860	2695	2530
1100	2860	2860	2840	2610	2450
1200	2860	2860	2760	2565	2405
1300	2860	2860	2715	2495	2360
1400	2860	2860	2650	2480	2330
1500	2860	2860	2640	2425	2305
1600	2860	2860	2585	2420	2270
1700	2860	2850	2580	2370	2265
1800	2860	2795	2530	2370	2230

12×109 with 259926
14×341 with 229098
14×320 with 259026

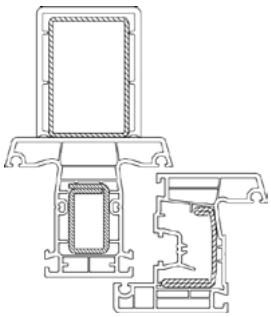

14x341 Mullion and 14x328 Door Sash

- This sheet is only applicable if the profile combination is continuous from head to sill and not applicable if fixed light above or below.
- Spans are the maximum calculated allowable, based on the revised NZS 4211, which requires that the member deflection at serviceability wind press (SWP) should not exceed 1/200 of the span.
- All spans have been calculated to indicate performance in each wind zone. Current NZS 4211 compliance should be checked against the latest aluplast reports and size limits imposed by NZS 4211, Section 5.2.2, should not be exceeded.
- Any custom calculations can be performed as required on request.

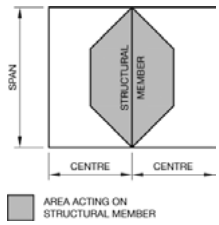

14×328 with 209193
14×341 with 229101

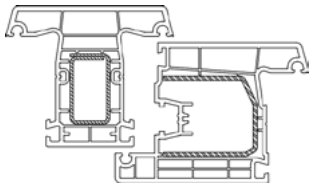

	Spans for each wind zone				
Centers	Low	Medium	High	Very High	Extra High
	510pa	680pa	970pa	1250pa	1515pa
600	2860	2825	2510	2320	2175
700	2860	2700	2395	2205	2065
800	2840	2580	2295	2125	1995
900	2730	2505	2225	2045	1940
1000	2660	2420	2170	1995	1870
1100	2580	2370	2105	1970	1845
1200	2530	2300	2080	1915	1830
1300	2465	2285	2025	1900	1780
1400	2450	2225	2015	1865	1775
1500	2395	2220	2000	1850	1760
1600	2390	2170	1970	1850	1745
1700	2340	2170	1970	1825	1745
1800	2340	2135	1950	1825	1730

14×328 with 209193
14×341 with 229098

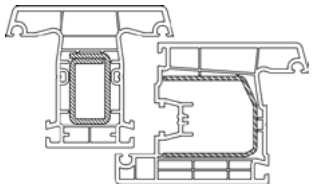

	Spans for each wind zone				
Centers	Low	Medium	High	Very High	Extra High
	510pa	680pa	970pa	1250pa	1515pa
600	2860	2860	2600	2400	2255
700	2860	2800	2485	2285	2140
800	2860	2675	2375	2205	2070
900	2835	2575	2305	2120	2000
1000	2760	2510	2230	2070	1940
1100	2675	2440	2180	2005	1915
1200	2625	2385	2160	1985	1860
1300	2555	2360	2100	1970	1845
1400	2540	2310	2090	1920	1840
1500	2485	2300	2045	1920	1800
1600	2460	2250	2045	1880	1800
1700	2430	2250	2005	1880	1785
1800	2400	2215	2005	1880	1785

14×328 with 209193
14×341 with 229098
and 2× 259023

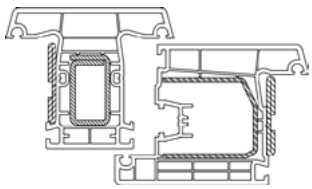

	Spans for each wind zone				
Centers	Low	Medium	High	Very High	Extra High
	510pa	680pa	970pa	1250pa	1515pa
600	2860	2860	2840	2610	2415
700	2860	2860	2715	2495	2340
800	2860	2860	2595	2385	2225
900	2860	2810	2520	2315	2170
1000	2860	2740	2430	2235	2120
1100	2860	2655	2380	2190	2055
1200	2835	2605	2315	2165	2030
1300	2790	2535	2295	2110	2000
1400	2725	2520	2240	2100	1965
1500	2675	2465	2230	2050	1965
1600	2620	2425	2185	2050	1925
1700	2615	2410	2155	2010	1925
1800	2600	2400	2145	2010	1900

14x345 Mullion and 14x328 Door Sash

- This sheet is only applicable if the profile combination is continuous from head to sill and not applicable if fixed light above or below.
- Spans are the maximum calculated allowable, based on the revised NZS 4211, which requires that the member deflection at serviceability wind press (SWP) should not exceed 1/200 of the span.
- All spans have been calculated to indicate performance in each wind zone. Current NZS 4211 compliance should be checked against the latest aluplast reports and size limits imposed by NZS 4211, Section 5.2.2, should not be exceeded.
- Any custom calculations can be performed as required on request.

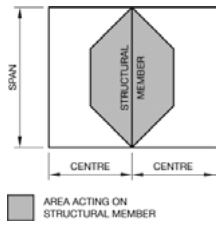

	Spans for each wind zone				
Centers	Low	Medium	High	Very High	Extra High
	510pa	680pa	970pa	1250pa	1515pa
600	2860	2860	2860	2685	2520
700	2860	2860	2795	2565	2410
800	2860	2860	2670	2455	2305
900	2860	2860	2570	2385	2235
1000	2860	2820	2505	2300	2180
1100	2860	2730	2440	2255	2115
1200	2860	2665	2380	2190	2090
1300	2860	2610	2360	2170	2035
1400	2805	2545	2305	2150	2025
1500	2740	2535	2295	2110	2000
1600	2735	2485	2250	2110	1980
1700	2680	2480	2250	2070	1980
1800	2680	2435	2210	2070	1955

14×328 with 209193
14×345 with 249035

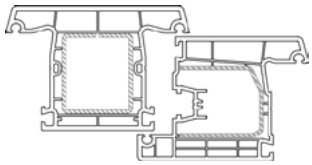

	Spans for each wind zone				
Centers	Low	Medium	High	Very High	Extra High
	510pa	680pa	970pa	1250pa	1515pa
600	2860	2860	2860	2860	2860
700	2860	2860	2860	2860	2850
800	2860	2860	2860	2860	2745
900	2860	2860	2860	2815	2640
1000	2860	2860	2860	2740	2570
1100	2860	2860	2860	2655	2490
1200	2860	2860	2805	2610	2445
1300	2860	2860	2765	2540	2380
1400	2860	2860	2695	2525	2365
1500	2860	2860	2685	2465	2315
1600	2860	2860	2625	2460	2310
1700	2860	2860	2615	2410	2265
1800	2860	2845	2575	2400	2265

12×109 with 229125
14×328 with 209193
14×345 with 249035

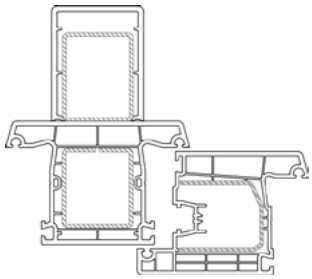

	Spans for each wind zone				
Centers	Low	Medium	High	Very High	Extra High
	510pa	680pa	970pa	1250pa	1515pa
600	2860	2860	2860	2860	2860
700	2860	2860	2860	2860	2860
800	2860	2860	2860	2860	2860
900	2860	2860	2860	2860	2820
1000	2860	2860	2860	2860	2745
1100	2860	2860	2860	2835	2660
1200	2860	2860	2860	2755	2615
1300	2860	2860	2860	2715	2545
1400	2860	2860	2860	2645	2530
1500	2860	2860	2815	2635	2470
1600	2860	2860	2805	2580	2460
1700	2860	2860	2750	2575	2415
1800	2860	2860	2750	2530	2400

12×109 with 259926
14×328 with 209193
14×345 with 249035

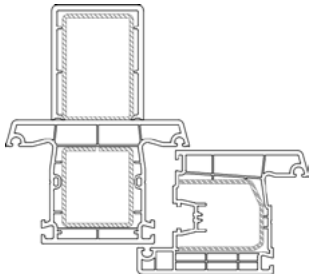

14x341 Mullion and 14x328 Door Sash with 12x109 Static Post

- This sheet is only applicable if the profile combination is continuous from head to sill and not applicable if fixed light above or below.
- Spans are the maximum calculated allowable, based on the revised NZS 4211, which requires that the member deflection at serviceability wind press (SWP) should not exceed 1/200 of the span.
- All spans have been calculated to indicate performance in each wind zone. Current NZS 4211 compliance should be checked against the latest aluplast reports and size limits imposed by NZS 4211, Section 5.2.2, should not be exceeded.
- Any custom calculations can be performed as required on request.

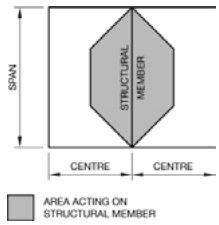

	Spans for each wind zone				
Centers	Low	Medium	High	Very High	Extra High
	510pa	680pa	970pa	1250pa	1515pa
600	2860	2860	2860	2860	2765
700	2860	2860	2860	2800	2645
800	2860	2860	2860	2695	2530
900	2860	2860	2820	2590	2455
1000	2860	2860	2750	2525	2370
1100	2860	2860	2660	2445	2320
1200	2860	2860	2615	2400	2255
1300	2860	2860	2545	2360	2235
1400	2860	2795	2530	2325	2180
1500	2860	2730	2475	2305	2170
1600	2860	2725	2460	2265	2130
1700	2860	2670	2420	2265	2130
1800	2860	2670	2400	2230	2115

12×109 with 229125
14×328 with 209193
14×341 with 229101

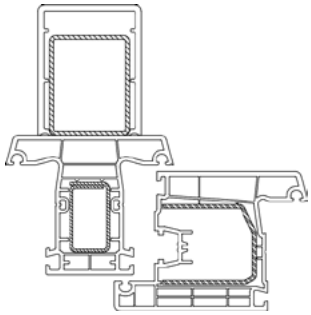

	Spans for each wind zone				
Centers	Low	Medium	High	Very High	Extra High
	510pa	680pa	970pa	1250pa	1515pa
600	2860	2860	2860	2860	2860
700	2860	2860	2860	2860	2855
800	2860	2860	2860	2860	2745
900	2860	2860	2860	2815	2640
1000	2860	2860	2860	2745	2575
1100	2860	2860	2860	2655	2490
1200	2860	2860	2810	2610	2445
1300	2860	2860	2765	2540	2385
1400	2860	2860	2695	2525	2370
1500	2860	2860	2685	2470	2315
1600	2860	2860	2630	2460	2310
1700	2860	2860	2615	2415	2265
1800	2860	2845	2575	2400	2265

12×109 with 259926
14×328 with 209193
14×341 with 229101

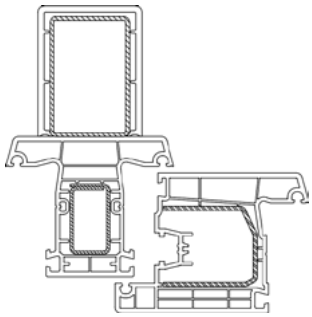

	Spans for each wind zone				
Centers	Low	Medium	High	Very High	Extra High
	510pa	680pa	970pa	1250pa	1515pa
600	2860	2860	2860	2860	2860
700	2860	2860	2860	2860	2860
800	2860	2860	2860	2860	2860
900	2860	2860	2860	2860	2780
1000	2860	2860	2860	2860	2710
1100	2860	2860	2860	2800	2625
1200	2860	2860	2860	2720	2575
1300	2860	2860	2860	2675	2510
1400	2860	2860	2845	2610	2495
1500	2860	2860	2775	2600	2440
1600	2860	2860	2770	2545	2430
1700	2860	2860	2715	2540	2385
1800	2860	2860	2715	2495	2385

12×109 with 259926
14×328 with 209193
14×341 with 229098

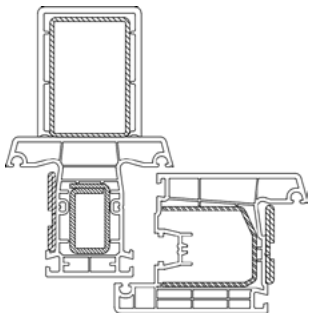

2x 14x328 Door Sash with 14x366 Mullion

- Spans are the maximum calculated allowable, based on the revised NZS 4211, which requires that the member deflection at serviceability wind press (SWP) should not exceed 1/200 of the span.
- All spans have been calculated to indicate performance in each wind zone. Current NZS 4211 compliance should be checked against the latest aluplast reports and size limits imposed by NZS 4211, Section 5.2.2, should not be exceeded.
- Any custom calculations can be performed as required on request.

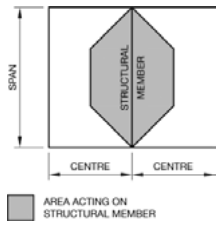

	Spans for each wind zone				
Centers	Low	Medium	High	Very High	Extra High
	510pa	680pa	970pa	1250pa	1515pa
700	2860	2860	2860	2685	2520
800	2860	2860	2795	2570	2410
900	2860	2860	2685	2490	2340
1000	2860	2860	2620	2405	2255
1100	2860	2855	2535	2355	2210
1200	2860	2775	2490	2290	2180
1300	2860	2730	2425	2270	2130

2 × 14×328 with 209193
14×366 with 229063

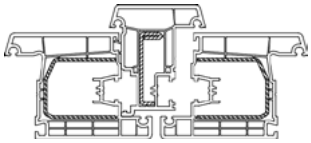

	Spans for each wind zone				
Centers	Low	Medium	High	Very High	Extra High
	510pa	680pa	970pa	1250pa	1515pa
700	2860	2860	2860	2825	2665
800	2860	2860	2860	2720	2550
900	2860	2860	2845	2615	2475
1000	2860	2860	2770	2545	2390
1100	2860	2860	2685	2465	2340
1200	2860	2860	2635	2425	2270
1300	2860	2860	2565	2360	2255

2 × 14×328 with 209193 and
2× 259023 14×366 with 229063

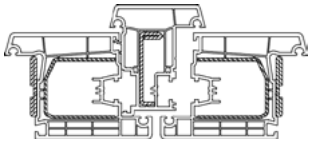

Coupled 14x307 Options

- Spans are the maximum calculated allowable, based on the revised NZS 4211, which requires that the member deflection at serviceability wind press (SWP) should not exceed 1/200 of the span.
- All spans have been calculated to indicate performance in each wind zone. Current NZS 4211 compliance should be checked against the latest aluplast reports and size limits imposed by NZS 4211, Section 5.2.2, should not be exceeded.
- Any custom calculations can be performed as required on request.

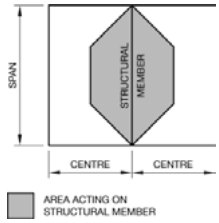

	Spans for each wind zone				
Centers	Low	Medium	High	Very High	Extra High
	510pa	680pa	970pa	1250pa	1515pa
600	2860	2860	2860	2860	2690
700	2860	2860	2860	2745	2570
800	2860	2860	2855	2625	2460
900	2860	2860	2745	2545	2390
1000	2860	2860	2675	2460	2305
1100	2860	2860	2590	2410	2255
1200	2860	2835	2545	2340	2195
1300	2860	2790	2475	2320	2175
1400	2860	2720	2465	2265	2150
1500	2860	2710	2405	2255	2115
1600	2860	2650	2400	2205	2115
1700	2860	2615	2355	2205	2075
1800	2805	2600	2355	2170	2075

2 × 14×307 with 259106 14×267 with 2× 209900

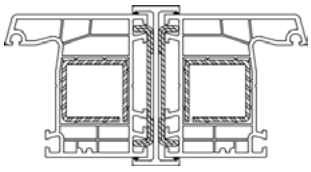

	Spans for each wind zone				
Centers	Low	Medium	High	Very High	Extra High
	510pa	680pa	970pa	1250pa	1515pa
600	2860	2860	2860	2860	2860
700	2860	2860	2860	2860	2860
800	2860	2860	2860	2860	2860
900	2860	2860	2860	2860	2860
1000	2860	2860	2860	2860	2860
1100	2860	2860	2860	2860	2860
1200	2860	2860	2860	2860	2785
1300	2860	2860	2860	2860	2740
1400	2860	2860	2860	2850	2675
1500	2860	2860	2860	2785	2670
1600	2860	2860	2860	2775	2605
1700	2860	2860	2860	2720	2600
1800	2860	2860	2860	2720	2555

2 × 14×307 with 259106 14×218 with 289218

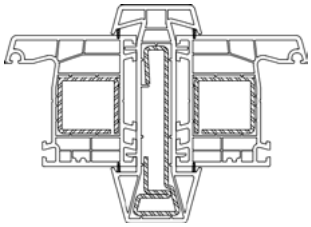

	Spans for each wind zone				
Centers	Low	Medium	High	Very High	Extra High
	510pa	680pa	970pa	1250pa	1515pa
600	2860	2860	2860	2860	2860
700	2860	2860	2860	2860	2860
800	2860	2860	2860	2860	2860
900	2860	2860	2860	2860	2860
1000	2860	2860	2860	2860	2860
1100	2860	2860	2860	2860	2860
1200	2860	2860	2860	2860	2860
1300	2860	2860	2860	2860	2860
1400	2860	2860	2860	2860	2860
1500	2860	2860	2860	2860	2860
1600	2860	2860	2860	2860	2860
1700	2860	2860	2860	2860	2835
1800	2860	2860	2860	2860	2785

2 × 14×307 with 259106 14×218 with 289218 and 70mm x 6mm flat bar

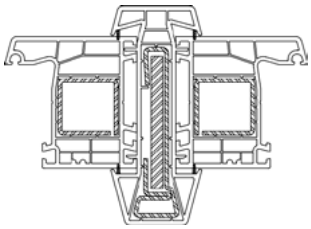

Smart-slide - Scheme A

- Spans are the maximum calculated allowable, based on the revised NZS4211:2008, which requires that the member deflection at serviceability wind press (SWP) should not exceed 1/200 of the span.
- 2640mm is the maximum over frame height limit and 1575mm is the maximum allowable opening size from edge of frame to centre of mullion, as per the Roto Patio Inowa Order Document.

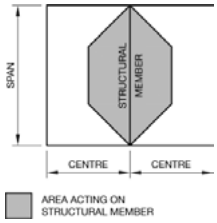

	Spans for each wind zone				
Centers	**Low**	**Medium**	**High**	**Very High**	**Extra High**
800	2640	2640	2640	2540	2380
900	2640	2640	2640	2460	2310
1000	2640	2640	2585	2375	2230
1100	2640	2640	2505	2325	2180
1200	2640	2640	2460	2260	2160
1300	2640	2640	2395	2240	2105
1400	2640	2640	2380	2190	2090
1500	2640	2620	2325	2180	2045
1600	2640	2565	2325	2135	2045
1700	2640	2565	2275	2135	2005
1800	2640	2515	2275	2135	2005
1900	2640	2515	2240	2115	2000
2000	2640	2515	2240	2080	2000

aluplast smart-slide 209294, 249035

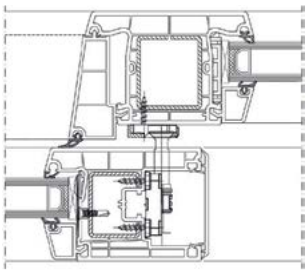

	Spans for each wind zone				
Centers	**Low**	**Medium**	**High**	**Very High**	**Extra High**
800	2640	2640	2640	2640	2640
900	2640	2640	2640	2640	2640
1000	2640	2640	2640	2640	2570
1100	2640	2640	2640	2640	2490
1200	2640	2640	2640	2605	2445
1300	2640	2640	2640	2540	2380
1400	2640	2640	2640	2520	2365
1500	2640	2640	2640	2465	2310
1600	2640	2640	2625	2460	2310
1700	2640	2640	2615	2410	2265
1800	2640	2640	2575	2400	2270
1900	2640	2640	2530	2375	2235
2000	2640	2640	2530	2350	2235

aluplast smart-slide with static post 209294, 249035, 229125

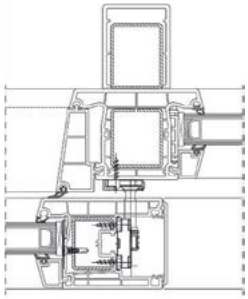

	Spans for each wind zone				
Centers	**Low**	**Medium**	**High**	**Very High**	**Extra High**
800	2640	2640	2640	2640	2640
900	2640	2640	2640	2640	2640
1000	2640	2640	2640	2640	2640
1100	2640	2640	2640	2640	2580
1200	2640	2640	2640	2640	2530
1300	2640	2640	2640	2630	2465
1400	2640	2640	2640	2565	2450
1500	2640	2640	2640	2555	2395
1600	2640	2640	2640	2500	2390
1700	2640	2640	2640	2500	2345
1800	2640	2640	2640	2450	2345
1900	2640	2640	2620	2450	2305
2000	2640	2640	2620	2420	2305

aluplast smart-slide with static post 209294, 249035, 259926

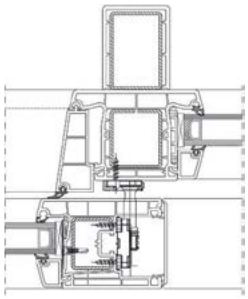

CARE & MAINTENANCE

Cleaning

STARKE AMBIANCE window profiles are made of a weather resistant and easy-to-care synthetic material of stable value. To clean the even, non-porous and hygienic surface, normal soapy water can be used. Soiling due to dust and rain can be removed easily by this means. Do not use abrasives or chemicals as nitro diluents, benzene or similar agents for cleaning. In case of soiling that cannot be removed as described above, please consult your window specialist.

Initial Cleaning

Despite all the care taken by the craftsmen during installation, soiling like residues of mortar, wallpaper paste, adhesives etc. may occur. Residues of mortar and colour splatters can be removed with a semi-rigid putty knife by carefully scraping off the soiling. After that, wipe with a damp cloth. Please be careful not to scratch the surfaces with the small but sharp pebbles in the mortar. Residual adhesives on the glass surface can be removed carefully with an inclined razor blade.

Maintenance

In order to ensure proper functioning of the hardware for your new STARKE AMBIANCE window and doors for years to come, the following maintenance works should be done at least once a year:

- Check all hardware elements with security-related function frequently for wear.
- Lubricate all movable parts with a drop of oil and the locking points of the hardware elements with acid-free grease or industrial Vaseline.
- Use only cleansing agents and care products that do not affect the hardware's corrosion protection.

Ventilation & Condensation

Condensation should not occur on your new STARKE AMBIANCE windows or doors. If condensation occurs, this is a sign that the humidity in your room is too high. Windows present such a high air impermeability and are sealed so tightly to the building structure that no natural air change can take place. By proper ventilation and with modern windows you can save heating costs and create a healthy room climate at the same time. Cross ventilation through two opposite windows is especially quick and effective – one single open window sometimes is not enough. Keeping the window open for 5 minutes is sufficient to change the indoor air. For a more thorough airing of the rooms, open the windows wide for 10 minutes. To facilitate the air change, Basic Air plus® or REGEL-air® ventilation systems can be installed in the window.

For this reason we recommend:

- Ventilate three to four times a day.
- Remove items that obstruct the air flow: leave an air gap between furniture and the wall; curtains should not cover the heater but reach only to the window sill.
- Keep doors to less heated rooms closed.
- Ventilate more frequently in case of additional humidity due to cooking, bathing, taking a shower etc.
- In the winter season, open your windows wide several times a day for a short time instead of keeping them tilted for hours.
- Always let humid air escape to the outside – never to other rooms.
- Fogged-up windows are a clear signal that ventilation is needed.
- Heating and frequent ventilation are the prerequisites for a healthy room climate.

WARRANTY

Starke Group Ltd warrants that, for a period of ten years from the date of supply:

(a) NZS 4211:2008 Performance of Windows, and NZS 4223:2016 Code of Practice for Glazing in Buildings

(b) As required under NZS 4211 the product or products specified will remain watertight.

(c) Installation of joinery is covered the installer.

If the Product does not perform as warranted, Starke Group Ltd will make good the Product, subject to the following terms:

(a) that the details on this coupon are filled out and returned to Starke Group Ltd within 90 days;

(b) that Starke Group Ltd is advised of and given an opportunity to inspect any fault;

(c) that any claims under this warranty need to be made in writing to Starke Group Ltd within 7 days of the fault first becoming apparent;

(d) that this warranty is not transferable and only applies to the original purchaser, unless Starke Group Ltd agrees otherwise;

(e) that this warranty only applies:

(a) that Starke Group Ltd will not be liable for any consequential,indirect or special damage or loss including, without limitation, any loss of profits;

(b) that the warranty does not apply to any fault caused by incorrect installation by anyone other than Starke Group Ltd or its authorised agents. Correct installation details are available on request.

(i) where the Product has been maintained in accordance with the maintenance procedure specified in this "Care and Maintenance" booklet;

(ii) to a defect in the workmanship or a defect that is directly attributable to a defect in the material of the Product; and

(iii) where the purchaser has paid in full for the supply (and installation if applicable) of the window joinery;

(f) that the warranty does not apply to any:

(i) glass or glazing materials used in the joinery; glass breakage and surface defects except premature IGU failure as determined by Starke Group Ltd.

(ii) defects due to any cause beyond Starke Group Ltd.'s control including, without limitation, defects in the structure to which the joinery has been affixed;

(iii) materials, hardware or componentry or any joinery not manufactured by Starke Group Ltd;

(iv) This warranty does not apply to used or second-hand joinery

(v) weather tightness - where the contract is one of manufacture and supply only, the junction between joinery and cladding systems is the responsibility or the builder;

(a) that Starke Group Ltd will not be liable for any consequential, indirect or special damage or loss including, without limitation, any loss of profits;

(b) that the warranty does not apply to any fault caused by incorrect installation by anyone other than Starke Group Ltd or its authorised agents. Correct installation details are available on request.

Please note: This warranty is subject to correct installation as outlined in our Installation Details Manual. This document is available on request for you or your builder.

BRANZ Appraisal

BRANZ Appraised
Appraisal No. 1005 [2018]

ALUPLAST® UPVC WINDOWS AND DOORS

Appraisal No. 1005 (2018)

Amended 16 August 2019

BRANZ Appraisals

Technical Assessments of products for building and construction.

Scan the QR code to view the full BRANZ report

aluplast® GmbH
Auf der Breit 2
D-76227
Karlsruhe
Germany

Email: sales.international@aluplast.net

Web: www.aluplast.net

BRANZ
1222 Moonshine Rd,
RD1, Porirua 5381
Private Bag 50 908
Porirua 5240.

STÄRKE
a window to a better world

Starke Group Ltd

2-4 Wilco Place, Wiri
Auckland 2104
New Zealand

+64 9 279 8617
sales@starke.co.nz

starke.co.nz

window & glass association nz
member

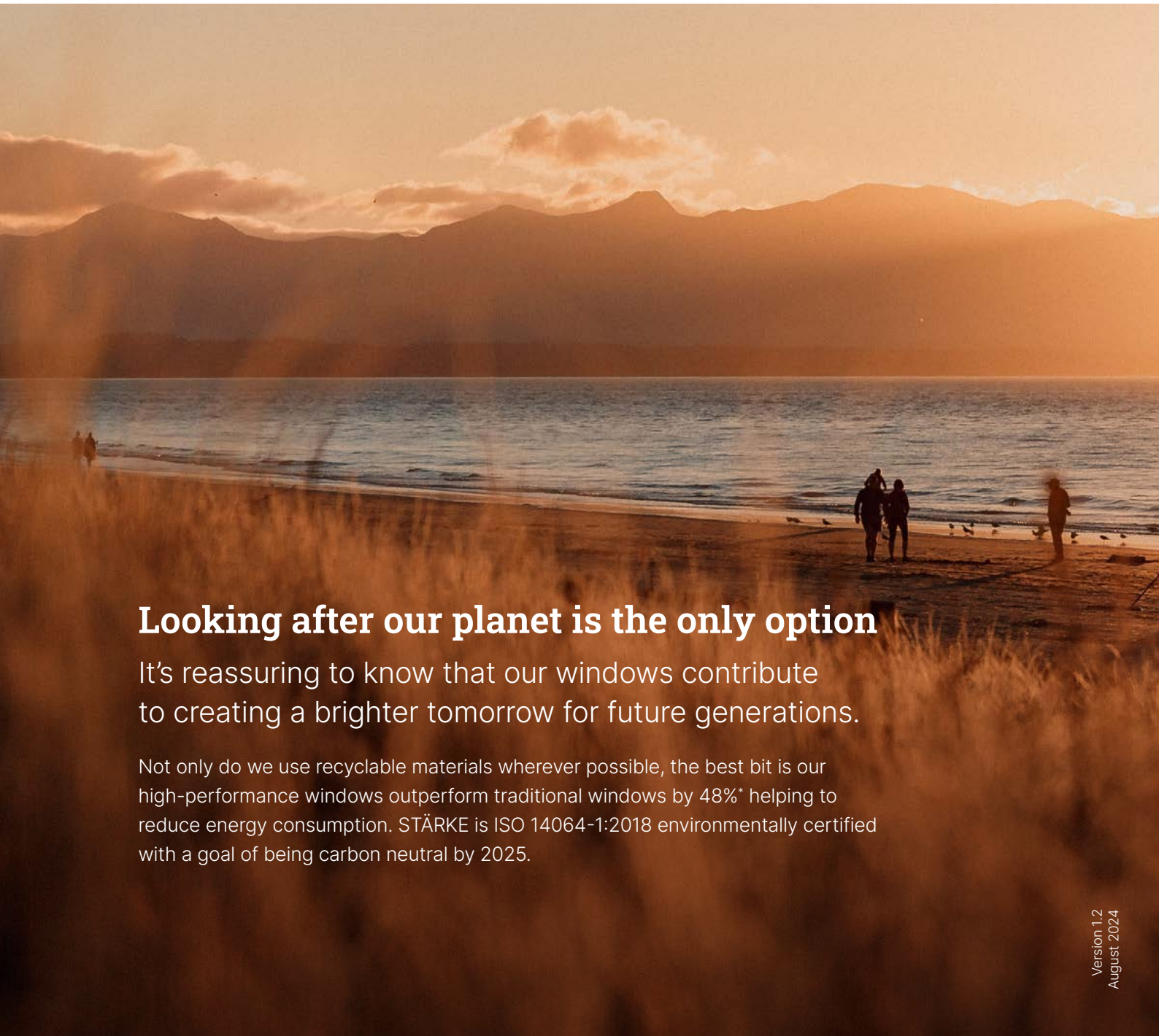

Looking after our planet is the only option

It's reassuring to know that our windows contribute to creating a brighter tomorrow for future generations.

Not only do we use recyclable materials wherever possible, the best bit is our high-performance windows outperform traditional windows by 48%* helping to reduce energy consumption. STÄRKE is ISO 14064-1:2018 environmentally certified with a goal of being carbon neutral by 2025.

Version 1.2
August 2024